Prevailing torque type hexagon thin nuts with nonmetallic insert

DIN 985

Sechskantmuttern mit Klemmteil;
mit nichtmetallischem Einsatz, niedrige Form

Supersedes September 1977 edition.

In keeping with current practice in standards published by the International Organization for Standardization (ISO), a comma has been used throughout as the decimal marker.

Dimensions in mm

1 Field of application

This standard specifies requirements for M 3 to M 48 prevailing torque type hexagon nuts with nonmetallic insert, assigned to product grade A for sizes up to M 16 and product grade B for sizes over M 16.

If, in special cases, nuts are to comply with specifications other than those given in this standard, e.g. regarding materials other than those specified in DIN 267 Part 15, performance at temperatures above + 120 °C, or corrosion resistance, this shall be agreed at the time of ordering (cf. DIN 267 Part 15).

Note. The proof load values specified in DIN 267 Part 4, which are lower than those specified in DIN 267 Part 15 and result in a correspondingly lower resistance to stripping (reduced locking action), apply for nuts covered in the present standard. DIN 267 Part 15 shall, however, apply for the proof clamp loads and the prevailing torques. These nuts are not suitable for yield point tightening methods.

2 Dimensions

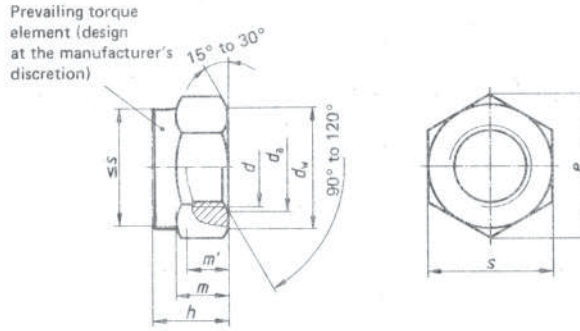

m' = minimum wrenching height.

Continued on pages 2 to 4

Thread size		M 3	M 4	M 5	M 6	M 7	M 8	M 10	M 12	M 14	M 16	M 18
		–	–	–	–	–	M 8 × 1	M 10 × 1	M 12 × 1,5	M 14 × 1,5	M 16 × 1,5	M 18 × 2
		–	–	–	–	–	–	M 10 × 1,25	M 12 × 1,25	–	–	M 18 × 1,5
P[1]		0,5	0,7	0,8	1	1	1,25	1,5	1,75	2	2	2,5
d_a	min.	3	4	5	6	7	8	10	12	14	16	18
	max.	3,45	4,6	5,75	6,75	7,75	8,75	10,8	13	15,1	17,3	19,5
d_w	min.	4,6	5,9	6,9	8,9	9,6	11,6	15,6	17,4	20,5	22,5	24,9
e	min.	6,01	7,66	8,79	11,05	12,12	14,38	18,9	21,1	24,49	26,75	29,56
h	max. = nominal size	4	5	5	6	7,5	8	10	12	14	16	18,5
	min.	3,7	4,7	4,7	5,7	7,14	7,64	9,64	11,57	13,3	15,3	17,66
m[2]	min.	2,4	2,9	3,2	4	4,7	5,5	6,5	8	9,5	10,5	13
m'[3]	min.	1,65	2,2	2,75	3,3	3,85	4,4	5,5	6,6	7,7	8,8	9,9
s	max. = nominal size	5,5	7	8	10	11	13	17	19	22	24	27
	min.	5,32	6,78	7,78	9,78	10,73	12,73	16,73	18,67	21,67	23,67	26,16

Thread size		M 20	M 22	M 24	M 27	M 30	M 33	M 36	M 39	M 42	M 45	M 48
		M 20 × 2	M 22 × 2	M 24 × 2	M 27 × 2	M 30 × 2	M 33 × 2	M 36 × 3	M 39 × 3	M 42 × 3	M 45 × 3	M 48 × 3
		M 20 × 1,5	M 22 × 1,5	–	–	–	–	–	–	–	–	–
P[1]		2,5	2,5	3	3	3,5	3,5	4	4	4,5	4,5	5
d_a	min.	20	22	24	27	30	33	36	39	42	45	48
	max.	21,6	23,7	25,9	29,1	32,4	35,6	38,9	42,1	45,4	48,6	51,8
d_w	min.	27,7	29,5	33,2	38	42,7	46,6	51,1	55,9	60,6	64,7	69,4
e	min.	32,95	35,03	39,55	45,2	50,85	55,37	60,79	66,44	72,09	76,95	82,6
h	max. = nominal size	20	22	24	27	30	33	36	39	42	45	48
	min.	18,7	20,7	22,7	25,7	28,7	31,4	34,4	37,4	40,4	43,4	46,4
m[2]	min.	14	15	15	17	19	22	25	27	29	32	36
m'[3]	min.	11	12,2	13,2	14,8	16,5	18,2	19,8	21,5	23,1	24,8	26,5
s	max. = nominal size	30	32	36	41	46	50	55	60	65	70	75
	min.	29,16	31	35	40	45	49	53,8	58,8	63,8	68,1	73,1

1) P = pitch of coarse thread as specified in DIN 13 Part 12.
2) Also minimum thread length.
3) $m' = 0{,}55\,d$.

3 Technical delivery conditions

Material		Steel
General requirements		As specified in DIN 267 Parts 1 and 15.
Thread	Tolerance	6H [1]
	As specified in	DIN 13 Parts 12 and 15.
Mechanical properties (nut body)	Property class (material)	For sizes up to M 39: 5, 6 [2], 8 or 10. For sizes over M 39: by agreement.
	As specified in	DIN 267 Part 4.
Material (insert)		Nonmetallic, e.g. polyamide
Performance (prevailing torques)		As specified in DIN 267 Part 15.
Limit deviations and geometrical tolerances	Product grade	For sizes up to M 16: A (previously, design m). For sizes over M 16: B (previously, design mg).
	As specified in	ISO 4759 Part 1.
Surface finish		As processed. DIN 267 Part 2 shall apply with regard to surface roughness. DIN 267 Part 20 shall apply with regard to permissible surface discontinuities. DIN 267 Part 9 shall apply with regard to electroplating.
Acceptance inspection		DIN 267 Part 5 shall apply with regard to acceptance inspection.

1) See DIN 267 Part 15 in this respect.
2) Only for fine thread nuts.

Note 1. The property classes specified in DIN 267 Part 4 have been retained for nuts covered in this standard, i.e. there has been no changeover to the new property classes specified in ISO 898 Part 2 involving higher proof load values, as these nuts cannot reliably be assumed to resist the higher proof loads because of their dimensions (height). Even to sustain the lower proof loads as hitherto specified in DIN 267 Part 4, nuts assigned to property class 8 may still require quenching and tempering. Hot formed nuts of sizes greater than M 16 assigned to property class 8, and all nuts assigned to property class 10 are to be quenched and tempered.

Note 2. Tolerance class 6H shall apply for the thread of nuts with and without coating.

Where a protective coating is applied, e.g. an electroplated coating complying with DIN 267 Part 9, depending on the coating thickness required, it may be necessary to select a larger fundamental deviation than that assigned to the H position (see DIN 267 Part 9). This, however, might impair the resistance of the bolt/nut assembly to stripping.

4 Mass

The values of mass are given for guidance only.

Thread size	M 3	M 4	M 5	M 6	M 7	M 8	M 10	M 12	M 14	M 16	M 18
Mass (7,85 kg/dm^3) for 1000 units, in kg, ≈.	0,5	1	1,4	2,4	3	5,1	10,6	17,2	26	34	45

Thread size	M 20	M 22	M 24	M 27	M 30	M 33	M 36	M 39	M 42	M 45	M 48
Mass (7,85 kg/dm^3) for 1000 units, in kg, ≈.	65	75	100	162	212	317	415	499	628	771	998

Approximately the same values may be assumed for fine thread nuts.

5 Designation

Designation of an M 12 prevailing torque type hexagon nut with a nonmetallic insert, assigned to property class 8:

Hexagon nut DIN 985 – M 12 – 8

If nuts of sizes over M 16 are to comply with product grade A (as specified in ISO 4759 Part 1), this shall be indicated in the designation by adding 'A', e.g.:

Hexagon nut DIN 985 – M 20 – 8 – A

The DIN 4000 – 2 – 7 tabular layout of article characteristics shall apply for nuts covered in this standard.

6 Marking

Nuts shall be marked in accordance with DIN 267 Part 4.

If symbols are used (clock-face system), two bars shall be embossed on the hexagon chamfer or edge at positions 8 and 10.

Standards referred to

DIN 13 Part 12	ISO metric screw threads; coarse and fine pitch threads from 1 to 300 mm diameter; selected diameters and pitches
DIN 13 Part 15	ISO metric screw threads; fundamental deviations and tolerances for screw threads of 1 mm diameter and larger
DIN 267 Part 1	Fasteners; technical delivery conditions; general requirements
DIN 267 Part 2	Fasteners; technical delivery conditions; types of finish and dimensional accuracy
DIN 267 Part 4	Fasteners; technical delivery conditions; property classes for nuts (previous classes)
DIN 267 Part 5	Fasteners; technical delivery conditions; acceptance inspection (modified version of ISO 3269, 1984 edition)
DIN 267 Part 9	Fasteners; technical delivery conditions; electroplated components
DIN 267 Part 15	Fasteners; technical delivery conditions; prevailing torque type nuts
DIN 267 Part 20	Fasteners; technical delivery conditions; surface discontinuities on nuts
DIN 4000 Part 2	Tabular layout of article characteristics for bolts, screws and nuts
ISO 898 Part 2	Mechanical properties of fasteners; nuts with specified proof load values
ISO 4759 Part 1	Tolerances for fasteners; bolts, screws and nuts with thread diameters $\geq 1{,}6$ and ≤ 150 mm and product grades A, B and C

Previous editions

DIN 985: 07.51, 06.56, 10.60, 03.63, 12.67, 09.77.

Amendments

The following amendments have been made to the September 1977 edition.

a) The title of the standard has been amended.

b) The dimensioning has been amended, limit deviations calculated from the permissible tolerances have been added.

c) The technical delivery conditions have been expanded.

d) The system of marking the nuts has been amended to harmonize with DIN 267 Part 4.

e) For sizes over M 16, product grade B has been specified instead of product grade A.

f) The standard has been editorially revised.

Explanatory notes

Although prevailing torque type thin nuts covered in this standard cannot meet the requirements specified for the property classes in clause 3 (see note 1 to clause 3), this style of nut is still much in demand. It was therefore decided to issue DIN 985 with revisions but without further qualification as to its application.

The feasibility of international standardization of property classes 04 and 05 for prevailing torque type thin nuts is currently being investigated.

International Patent Classification

F 16 B 39/28