UDC 621.882.31 : 621.882.55 May 1987

All-metal prevailing torque type hexagon nuts

DIN 980

Sechskantmuttern mit Klemmteil; Ganzmetallmuttern

Supersedes December 1972 edition withdrawn in 1983.

In keeping with current practice in standards published by the International Organization for Standardization (ISO), a comma has been used throughout as the decimal marker.

Dimensions in mm

1 Field of application

This standard specifies requirements for M 3 to M 39 prevailing torque type hexagon nuts (all-metal nuts), assigned to product grade A for sizes up to M 16, and to product grade B for sizes over M 16.

2 Concept

2.1 Prevailing torque type hexagon nuts

Prevailing torque type hexagon nuts are hexagon nuts in which increased friction in the thread prevents the nut loosening itself. This friction is produced by the design of the prevailing torque element in the nut, which results in axial and/or radial clamping in the bolted connection.

2.2 Single-piece metal nuts (type V)

Single-piece metal nuts are nuts without an insert, in which increased friction is created by the appropriate deformation of the prevailing torque element of the nut.

2.3 Two-piece metal nuts with metal prevailing torque element (type M)

Two-piece metal nuts are nuts, in which increased friction is created by an additional metal element inserted in the prevailing torque element of the nut. This type does not have full loadability; see clause 3.

3 Dimensions

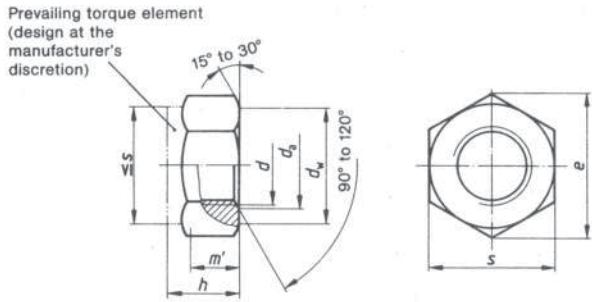

m' = minimum wrenching height.

Continued on pages 2 to 4

		M 3	M 4	M 5	M 6	M 7	M 8	M 10	M 12	M 14	M 16	M 18	M 20	M 22	M 24	M 27	M 30	M 33	M 36	M 39
Thread size d		–	–	–	–	–	M 8 × 1	M 10 × 1	M 12 × 1,5	M 14 × 1,5	M 16 × 1,5	M 18 × 2	M 20 × 2	M 22 × 2	M 24 × 2	M 27 × 2	M 30 × 2	M 33 × 2	M 36 × 3	M 39 × 3
		–	–	–	–	–	–	M 10 × 1,25	M 12 × 1,25	–	–	M 18 × 1,5	M 20 × 1,5	M 22 × 1,5	–	–	–	–	–	–
P[1]		0,5	0,7	0,8	1	1	1,25	1,5	1,75	2	2	2,5	2,5	2,5	3	3	3,5	3,5	4	4
d_a	min.	3	4	5	6	7	8	10	12	14	16	18	20	22	24	27	30	33	36	39
	max.	3,45	4,6	5,75	6,75	7,75	8,75	10,8	13	15,1	17,3	19,5	21,6	23,7	25,9	29,1	32,4	35,6	38,9	42,1
d_w	min.	4,6	5,9	6,9	8,9	9,6	11,6	15,6	17,4	20,5	22,5	24,9	27,7	29,5	33,2	38	42,7	46,6	51,1	55,9
e	min.	6,01	7,66	8,79	11,05	12,12	14,38	18,9	21,1	24,49	26,75	29,56	32,95	35,03	39,55	45,2	50,85	55,37	60,79	66,44
h	max. = nominal size	3,7	4,2	5,1	6	7	8	10	12	14	16	18	20	22	24	27	30	33	36	39
	min.	3,4	3,9	4,8	5,7	6,5	7,5	9	11	12	14	16	18	20	22	25	28	31	34	37
m'[2]	min.	1,65	2,2	2,75	3,3	3,85	4,4	5,5	6,6	7,7	8,8	9,9	11	12,2	13,2	14,8	16,5	18,2	19,8	21,5
s	max. = nominal size	5,5	7	8	10	11	13	17	19	22	24	27	30	32	36	41	46	50	55	60
	min.	5,32	6,78	7,78	9,78	10,73	12,73	16,73	18,67	21,67	23,67	26,16	29,16	31	35	40	45	49	53,8	58,8

1) P = pitch of coarse thread as specified in DIN 13 Part 12.

2) $m' = 0{,}55\ d$.

4 Technical delivery conditions

Material		Steel
General requirements		As specified in DIN 267 Parts 1 and 15.
Thread	Tolerance	6H [1]
	Standard	DIN 13 Parts 12 and 15
Mechanical properties	Property class (material)	5, 8, 10, or 12 (for sizes no greater than M16)
	Standard	ISO 898 Part 2 for type V (coarse thread nuts); DIN 267 Part 4 for type M and type V (fine thread nuts).
Performance (prevailing torques)		As specified in DIN 267 Part 15.
Limit deviations and geometrical tolerances	Product grade	For sizes up to M16: A (previously, m). For sizes over M16: B (previously, mg).
	Standard	ISO 4759 Part 1.
Surface finish		As processed. DIN 267 Part 2 shall apply with regard to surface roughness. DIN 267 Part 20 shall apply with regard to permissible surface discontinuities. DIN 267 Part 9 shall apply with regard to electroplating.
Acceptance inspection		DIN 267 Part 5 shall apply with regard to acceptance inspection.

[1] See DIN 267 Part 15 in this respect.

Note 1. The property classes specified in DIN 267 Part 4 have been retained for types M and V nuts with a fine pitch thread, i.e. there has been no changeover to the new property classes specified in ISO 898 Part 2 involving higher proof load values, as these nuts cannot reliably be assumed to resist the higher proof loads because of their dimensions (height).

Note 2. Tolerance class 6H shall apply for the thread of nuts with and without coating.

Where a protective coating is applied, e.g. an electroplated coating complying with DIN 267 Part 9, depending on the coating thickness required, it may be necessary to select a larger fundamental deviation than that assigned to the H position (see DIN 267 Part 9). This, however, might impair the resistance of the bolt/nut assembly to stripping.

5 Designation

Designation of an M12 hexagon nut, assigned to property class 8:

Hexagon nut DIN 980 – M M12 – 8

If nuts of sizes over M16 are to comply with product grade A (as specified in ISO 4759 Part 1), this shall be indicated in the designation by adding "A", e.g.:

Hexagon nut DIN 980 – M M20 – 8 – A

The DIN 4000-2-7 tabular layout of article characteristics shall apply for nuts covered in this standard.

6 Marking

Type V nuts with coarse pitch thread shall be marked in accordance with DIN 267 Part 15. In addition, code numbers 8, 10 and 12 on type M nuts and type V nuts with fine pitch thread shall be flanked by two vertical bars: |8|, |10|, |12| (see also DIN 267 Part 4). Where symbols are used (clock-face system), two bars shall be embassed on the hexagon chamfer or edge.

Standards referred to

DIN 13 Part 12	ISO metric screw threads; coarse and fine pitch threads from 1 to 300 mm diameter; selected diameters and pitches
DIN 13 Part 15	ISO metric screw threads; fundamental deviations and tolerances for screw threads of 1 mm diameter and larger
DIN 267 Part 1	Fasteners; technical delivery conditions; general requirements
DIN 267 Part 2	Fasteners; technical delivery conditions; types of finish and dimensional accuracy
DIN 267 Part 4	Fasteners; technical delivery conditions; property classes for nuts with specified proof loads (previous classes)
DIN 267 Part 5	Fasteners; technical delivery conditions; acceptance inspection (modified version of ISO 3269, 1984 edition)
DIN 267 Part 9	Fasteners; technical delivery conditions; electroplated components
DIN 267 Part 15	Fasteners; technical delivery conditions; prevailing torque type nuts
DIN 267 Part 20	Fasteners; technical delivery conditions; surface discontinuities on nuts
DIN 982	Prevailing torque type hexagon nuts with nonmetallic insert
DIN 985	Prevailing torque type hexagon thin nuts with nonmetallic insert
DIN 4000 Part 2	Tabular layout of article characteristics for bolts, screws and nuts
ISO 898 Part 2	Mechanical properties of fasteners; nuts with specified proof load values
ISO 4759 Part 1	Tolerances for fasteners; bolts, screws and nuts with thread diameters $\geq 1{,}6$ and ≤ 150 mm and product grades A, B and C

Previous edition

DIN 980: 12.72.

Amendments

The following amendments have been made to the December 1972 edition, which was withdrawn in 1983.

a) The title of the standard has been changed.
b) Dimensions h and m' have been added.
c) Product grade A (previously, design m) has been amended to product grade B for sizes over M 16.
d) The "Marking" clause has been added.
e) The technical delivery conditions have been expanded.
f) The standard has been editorially revised.

Explanatory notes

The previous edition of DIN 980 was withdrawn in 1983, since it was proposed that it should be superseded by DIN 6924 and DIN 6925 in the course of the changeover to the new widths across flats. This seemed sensible as, bar a few exceptions, the dimensions of the all-metal nuts (type V) covered in DIN 980 were the same as those specified in DIN 6925, and because the specifications regarding two-part prevailing torque type nuts with metal prevailing torque element (type M) were in any case to be withdrawn since this type was considered obsolete. Type M nuts with nonmetallic prevailing torque element also covered in DIN 980 were no longer acceptable as they were too low and were to be replaced by a more suitable design. The nuts as specified in DIN 6924 were intended to meet this demand.

However, following the withdrawal of the December 1972 edition of DIN 980, it became clear that DIN 6924 and DIN 6925 could not completely take the place of DIN 980, as

a) type M nuts were still required for spare parts;
b) changeover of the widths across flats for sizes M 10, M 12, M 14 and M 22 to the new widths specified in ISO 272, which had already been introduced in DIN 6924 and DIN 6925, was not as yet possible.

It was therefore decided to republish, in a revised form, DIN 980 and DIN 982 (which had also been withdrawn).

As the specifications for type N nuts are now fully covered by DIN 982 and DIN 985, it was thus possible to omit all such specifications in DIN 980, which hence deals exclusively with all-metal nuts.

It is planned that, in the near future, there will be a changeover of the widths across flats for sizes M 10, M 12, M 14 and M 22 to the new widths specified in ISO 272. Although DIN 6924 and DIN 6925 already include the new widths across flats and also largely correspond to the relevant ISO Standards, these standards will probably not, as originally planned, supersede DIN 980 and DIN 982, as they do not yet reflect in all respects current thinking on the next generation of torque type nuts and a changeover in a number of stages should be avoided where possible. This next generation should satisfy the following requirements:

a) the nuts should be interchangeable with the corresponding ISO products;
b) it should be possible to use the nuts on automatic feed and bolting equipment.

Germany will propose in ISO/TC 2 to reduce the tolerances for the nut heights specified in ISO 7040 and ISO 7042, in order that requirement b) above can be satisfied, and additionally propose the inclusion of nuts with fine pitch thread. The decision as to whether Germany will adopt the ISO Standards referred to without amendment or in a modified form will depend on the result of the discussions in ISO/TC 2.

International Patent Classification

F 16 B 39/28