UDC 621.882.32 October 1987

Hexagon slotted nuts and castle nuts with metric coarse and fine pitch thread

Product grades A and B

DIN 935 Part 1

Kronenmuttern; metrisches Regel- und Feingewinde; Produktklassen A und B

Supersedes December 1983 edition.

In keeping with current practice in standards published by the International Organization for Standardization (ISO), a comma has been used throughout as the decimal marker.

The new widths across flats 16 mm, 18 mm, 21 mm and 34 mm as specified in ISO 272 shall be used instead of the previous widths across flats 17 mm, 19 mm, 22 mm and 32 mm for thread sizes M 10, M 12, M 14 and M 22; see example of designation in clause 4.

It is intended to omit the obsolescent widths across flats by 1 July 1992 at the latest.

Dimensions in mm

1 Field of application

This standard specifies requirements for M 4 to M 100 hexagon slotted nuts and castle nuts, assigned to product class A (up to size M 16) and product class B (for sizes above M 16).

If, in special cases, nuts are to comply with specifications other than those given in this standard, e.g. regarding property class, they shall be selected in accordance with the relevant standards.

2 Dimensions

Hexagon slotted nuts (up to size M 10)

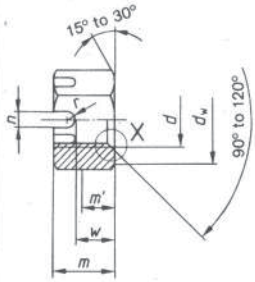

Hexagon castle nuts (size M 12 or more)

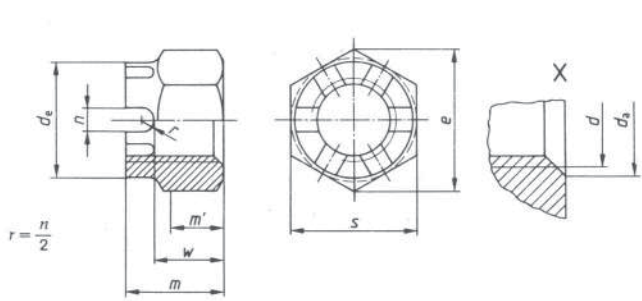

Other dimensions as for left-hand illustration.

m' = minimum wrenching height.

The bottom of the slots, at the manufacturer's discretion, may be rounded or chamfered. Hexagon slotted nuts and castle nuts may be supplied with the slotted part threaded or unthreaded. The faces of that part may be rounded.

Continued on pages 2 to 6

Thread size (d)		M 4	M 5	M 6	(M 7)	M 8	M 10		M 12		(M 14)		M 16	(M 18)
		–	–	–	–	M 8 × 1	M 10 × 1		M 12 × 1,5		(M 14 × 1,5)		M 16 × 1,5	(M 18 × 1,5)
		–	–	–	–	–	M 10 × 1,25		M 12 × 1,25		–		–	(M 18 × 2)
P[1]		0,7	0,8	1	1	1,25	1,5		1,75		2		2	2,5
d_a	min.	4	5	6	7	8	10		12		14		16	18
	max.	4,6	5,75	6,75	7,75	8,75	10,8		13		15,1		17,3	19,5
d_e	max.	–	–	–	–	–	–		16	17	18	19	22	25
	min.	–	–	–	–	–	–		15,57	16,57	17,57	18,48	21,48	24,3
d_w	min.	5,8	6,8	8,8	9,5	11,3	14,3	15,3	16,2	17,2	19,2	20,2	22,2	24,8
e	min.	7,66	8,79	11,05	12,12	14,38	17,77	18,9	20,03	21,1	23,35	24,49	26,75	29,56
m	max. = nominal size	5	6	7,5	8	9,5	12		15		16		19	21
	min.	4,7	5,7	7,14	7,64	9,14	11,57		14,57		15,57		18,48	20,16
m'	min.	2,3	3	3,8	4,2	4,9	6,1		7,7		8,2		9,8	11,2
n	min.	1,2	1,4	2	2	2,5	2,8		3,5		3,5		4,5	4,5
	max.	1,45	1,65	2,25	2,25	2,75	3,05		3,8		3,8		4,8	4,8
s	max. = nominal size	7	8	10	11	13	16	17	18	19	21	22	24	27
	min.	6,78	7,78	9,78	10,73	12,73	15,73	16,73	17,73	18,67	20,67	21,67	23,67	26,16
w	min.	2,9	3,7	4,7	5,2	6,14	7,64		9,64		10,57		12,57	14,57
	max.	3,2	4	5	5,5	6,5	8		10		11		13	15
Split pin as in DIN 94[2]		1 × 10	1,2 × 12	1,6 × 14	1,6 × 14	2 × 16	2,5 × 20		3,2 × 22		3,2 × 25		4 × 28	4 × 32

Thread size (d)		M 20	(M 22)		M 24	(M 27)	M 30	(M 33)	M 36	(M 39)	M 42	(M 45)
		M 20 × 2	(M 22 × 1,5)		M 24 × 2	(M 27 × 2)	M 30 × 2	(M 33 × 2)	M 36 × 3	(M 39 × 3)	M 42 × 3	(M 45 × 3)
		M 20 × 1,5	(M 22 × 2)		–	–	–	–	–	–	–	–
P[1]		2,5	2,5		3	3	3,5	3,5	4	4	4,5	4,5
d_a	min.	20	22		24	27	30	33	36	39	42	45
	max.	21,6	23,8		25,9	29,2	32,4	35,6	38,9	42,1	45,4	48,6
d_e	max.	28	30	32	34	38	42	46	50	55	58	62
	min.	27,3	29,3	31	33	37	41	45	49	53,8	56,8	60,8
d_w	min.	27,7	29,5	31,3	33,2	38	42,7	46,6	51,1	55,9	60,6	64,7
e	min.	32,95	35,03	37,29	39,55	45,2	50,85	55,37	60,79	66,44	71,3	76,95
m	max. = nominal size	22	26		27	30	33	35	38	40	46	48
	min.	21,16	25,16		26,16	29,16	32	34	37	39	45	47
m'	min.	11,9	13,5		14,2	16,6	18,2	19,8	21,9	23,5	25,9	27,5
n	min.	4,5	5,5		5,5	5,5	7	7	7	7	9	9
	max.	4,8	5,8		5,8	5,8	7,36	7,36	7,36	7,36	9,36	9,36
s	max. = nominal size	30	32	34	36	41	46	50	55	60	65	70
	min.	29,16	31	33	35	40	45	49	53,8	58,8	63,1	68,1
w	min.	15,57	17,57		18,48	21,48	23,48	25,48	28,48	30,28	33,38	35,38
	max.	16	18		19	22	24	26	29	31	34	36
Split pin as in DIN 94[2]		4 × 36	5 × 36		5 × 40	5 × 45	6,3 × 50	6,3 × 56	6,3 × 63	6,3 × 71	8 × 71	8 × 80

For 1) and 2), see page 3.

Thread size (d)		M 48	(M 52)	M 56	(M 60)	M 64	(M 68)	M 72 × 6	(M 76 × 6)	M 80 × 6	(M 85 × 6)	M 90 × 6	M 100 × 6
		M 48 × 3	(M 52 × 3)	M 56 × 4	(M 60 × 4)	M 64 × 4	(M 68 × 4)	M 72 × 4	(M 76 × 4)	M 80 × 4	(M 85 × 4)	M 90 × 4	M 100 × 4
P[1]		5	5	5,5	5,5	6	6	–	–	–	–	–	–
d_a	min.	48	52	56	60	64	68	72	76	80	85	90	100
	max.	51,8	56,2	61	64,8	69,1	73,4	77,8	82,1	86,4	91,8	97,2	108
d_e	max.	65	70	75	80	85	90	95	100	105	110	120	130
	min.	63,8	68,8	73,8	78,8	83,6	88,6	93,6	98,6	103,6	108,6	118,6	128,4
d_w	min.	69,4	74,2	78,7	83,4	88,2	92,9	97,7	102,4	107,2	111,9	121,1	135,4
e	min.	82,6	88,25	93,56	99,21	104,86	110,51	116,16	121,81	127,46	133,11	144,08	161,02
m	max. = nominal size	50	54	57	63	66	69	73	76	79	88	92	100
	min.	49	52,8	55,8	61,8	64,8	67,8	71,8	74,8	77,8	86,6	90,6	98,6
m'	min.	29,1	32,3	34,7	37,1	39,3	41,7	44,9	47,3	49,7	52,9	56,1	62,5
n	min.	9	9	9	11	11	11	11	11	11	14	14	14
	max.	9,36	9,36	9,36	11,43	11,43	11,43	11,43	11,43	11,43	14,43	14,43	14,43
s	max. = nominal size	75	80	85	90	95	100	105	110	115	120	130	145
	min.	73,1	78,1	82,8	87,8	92,8	97,8	102,8	107,8	112,8	117,8	127,5	142,5
w	min.	37,38	41,38	44,38	47,38	50,26	53,26	57,26	60,26	63,26	67,26	71,26	79,26
	max.	38	42	45	48	51	54	58	61	64	68	72	80
Split pin as in DIN 94[2]		8 × 80	8 × 90	8 × 100	10 × 100	10 × 100	10 × 112	10 × 112	10 × 125	10 × 140	13 × 140	13 × 140	13 × 160

Sizes in brackets shall be avoided where possible.

[1]) P = pitch of coarse thread as specified in DIN 13 Part 12.

[2]) The split pin lengths have been given for guidance only.

Number of slots: up to size M 39: 6;
from size M 42 to size M 68: 8;
size M 72 or more: 10.

3 Technical delivery conditions

Material		Steel	Stainless steel	Non-ferrous metals
General requirements		As specified in DIN 267 Part 1.		
Thread	Tolerance	6H [1]		
	As specified in	DIN 13 Parts 12 and 15.		
Mechanical properties	Property class (material)	For sizes up to M 39: 6,8 [2] or 10 [2]; for larger sizes: subject to agreement.	For sizes up to M 20: A 2-70; for sizes above M 20 up to M 39: A 2-50; for sizes above M 39: subject to agreement.	E.g. CU2 or CU3.
	As specified in	ISO 898 Part 2 and DIN 267 Part 23.	DIN 267 Part 11.	DIN 267 Part 18.
Limit deviations, geometrical tolerances	Product grade	For sizes up to M 16: A; for larger sizes: B.		
	As specified in	ISO 4759 Part 1.		
Surface finish		As processed.	Bright.	Bright.
		DIN 267 Part 2 shall apply with regard to surface roughness. DIN 267 Part 20 shall apply with regard to permissible surface discontinuities. DIN 267 Part 21 shall apply with regard to the widening test. DIN 267 Part 9 shall apply with regard to electroplating.[1] DIN 267 Part 10 shall apply with regard to hot dip galvanizing.		
Acceptance inspection		DIN 267 Part 5 shall apply with regard to acceptance inspection.		

[1] Where a protective coating is applied, e.g. an electroplated coating complying with DIN 267 Part 9, depending on the coating thickness required, it may be necessary, particularly in the case of tolerance class 6H nuts, to select a larger fundamental deviation than that assigned to the H position (see DIN 267 Part 9). This, however, might impair the resistance of the bolt/nut assembly to stripping.

[2] As a deviation from DIN 267 Part 23, a minimum hardness of 272 HV 30 shall be adequate for fine pitch thread nuts assigned to property classes 8 and 10.

4 Designation

Designation of an M 12 hexagon castle nut assigned to property class 8:

Hexagon castle nut DIN 935 – M 12 – 8

This designation signifies that the widths across flats for sizes M 10, M 12, M 14 and M 22 are those hitherto specified, viz. 17 mm, 19 mm, 22 mm and 32 mm. If the nuts are to be supplied with the new widths across flats as specified in ISO 272 (16 mm, 18 mm, 21 mm and 34 mm), the width across flats (SW) shall be included in the designation, e.g.:

Hexagon castle nut DIN 935 – M 12 – SW 16 – 8

If product grade A is required for sizes exceeding M 16, the product grade shall be included in the designation, e.g.:

Hexagon castle nut DIN 935 – M 20 – 8 – A

Where hexagon castle nuts of sizes between M 12 and M 39 shall be supplied as slotted nuts, the symbol KK shall be included in the designation, e.g.:

Hexagon castle nut DIN 935 – M 20 – KK – 8

DIN 962 shall apply with regard to the designation of designs and types, with additional details to be given when ordering.

Where the previous types, m or mg, are indicated on existing documents, product grade A shall apply for type m and product grade B for type mg. If there is no such indication, product grade A shall apply.

Hexagon slotted nuts and castle nuts covered in this standard may be supplied in free cutting steel if, in the order details, symbol AU has been added to the symbol denoting the property class, e.g.:

Hexagon castle nut DIN 935 – M 12 – 6 AU

The DIN 4000 – 2 – 7 tabular layout of article characteristics shall apply for nuts covered in this standard.

5 Mass

The values of mass given for steel nuts are for guidance only.

Thread size (d)	M 4	M 5	M 6	M 7	M 8	M 10	M 12	M 14	M 16	M 18	M 20
Mass (7,85 kg/dm^3) per 1000 units, in kg, ≈	1,12	2,3	3,16	3,96	7,35	15,8	20	27	38,9	57,5	75,2

Thread size (d)	M 22	M 24	M 27	M 30	M 33	M 36	M 39	M 42	M 45	M 48	M 52
Mass (7,85 kg/dm^3) per 1000 units, in kg, ≈	93	131	192	264	333	447	584	710	860	1060	1300

Thread size (d)	M 56	M 60	M 64	M 68	M 72 × 6	M 76 × 6	M 80 × 6	M 85 × 6	M 90 × 6	M 100 × 6
Mass (7,85 kg/dm^3) per 1000 units, in kg, ≈	1500	1800	2150	2500	2900	3300	3700	4100	5450	7600

Approximately the same values of mass may be assumed for nuts with fine pitch thread. For sizes M 10, M 12, M 14 and M 22, the values of mass for nuts with the previous widths across flats 17 mm, 19 mm, 22 mm and 32 mm shall apply.

6 Marking

The specifications given in ISO 898 Part 2, DIN 267 Parts 11, 18 and 23 shall apply for the marking of hexagon slotted nuts and castle nuts.

Nuts manufactured by machining, of property classes above 6 as specified in ISO 898 Part 2, shall only be marked subject to particular agreement, marking on the bearing faces being avoided where possible.

Standards referred to

DIN 13 Part 12	ISO metric screw threads; coarse and fine pitch threads with diameters from 1 to 300 mm; selection of diameters and pitches
DIN 13 Part 15	ISO metric screw threads; fundamental deviations and tolerances for screw threads of 1 mm diameter and larger
DIN 94	Split pins
DIN 267 Part 1	Fasteners; technical delivery conditions; general requirements
DIN 267 Part 2	Fasteners; technical delivery conditions; types of finish and dimensional accuracy
DIN 267 Part 5	Fasteners; technical delivery conditions; acceptance inspection (modified version of ISO 3269, 1984 edition)
DIN 267 Part 9	Fasteners; technical delivery conditions; electroplated components
DIN 267 Part 10	Fasteners; technical delivery conditions; hot dip galvanized components
DIN 267 Part 11	Fasteners; technical delivery conditions, with addenda to ISO 3506; corrosion-resistant stainless steel components
DIN 267 Part 18	Fasteners; technical delivery conditions; non-ferrous metal components
DIN 267 Part 20	Fasteners; technical delivery conditions; surface discontinuities on nuts
DIN 267 Part 21	Fasteners; technical delivery conditions; widening test for nuts
DIN 267 Part 23	Fasteners; technical delivery conditions; property classes for nuts with fine pitch thread (ISO classes)
DIN 962	Bolts, screws, studs and nuts; designations, types and finishes
DIN 4000 Part 2	Tabular layout of article characteristics for bolts, screws and nuts
ISO 272	Fasteners; hexagon products, widths across flats
ISO 898 Part 2	Mechanical properties of fasteners; nuts with specified proof load values
ISO 4759 Part 1	Tolerances for fasteners; bolts, screws and nuts with thread diameters $\geq$ 1,6 and $\leq$ 150 mm; product grades A, B and C

Previous editions

DIN Kr 753: 12.34, 09.36; DIN 935: 05.68, 04.77; DIN 533 Part 1: 01.41, 09.59, 06.63; DIN 534 Part 1: 01.41x, 06.63; DIN 935 Part 1: 01.26, 04.34, 06.37, 04.42x, 02.54, 05.56, 06.63, 12.83.

Amendments

In comparison with the December 1983 edition, a note on the period of validity of the previous widths across flats has been included.

Explanatory notes

For more than 20 years efforts have been directed towards the achievement of the international interchangeability of fasteners by preparing international standards for the product concerned. ISO Standards have now been published for the most important types of fasteners (see ISO Standards Handbook 18).

However, international efforts only serve a useful purpose if national standards are adapted as far as possible to international standards, or, ideally, replaced by them. Current DIN Standards already agree in substance with the relevant ISO Standards, but still differ in some respects, as for instance in the widths across flats for hexagon products.

The Federal Republic of Germany adopted International Standard ISO 272 on widths across flats as national standard DIN ISO 272 in October 1979. Nevertheless, widths across flats deviating from DIN ISO 272 are still being used in Germany for nominal sizes M 10, M 12, M 14 and M 22. The table below compares the previous widths across flats with the new ones specified for the four nominal sizes referred to.

Thread size	M 10	M 12	M 14	M 22
Previous width across flats, in mm	17	19	22	32
New width across flats as in ISO 272, in mm	16	18	21	34

The manufacturers and users of hexagon products participating in the work of the *Normenausschuß Mechanische Verbindungselemente* (Fasteners Standards Committee), together with representatives of the dealers in fasteners, have decided to introduce the new widths across flats in all relevant product standards. Since experience has shown, that the introduction of the new widths across flats has not been advanced by their inclusion in DIN Standards merely as preferred alternatives to the previous widths across flats, the following decisions have been reached to accelerate the changeover procedure.

Supplementary to current DIN Standards specifying the previous widths across flats, DIN ISO Standards dealing with the same products will, wherever ISO Standards are available, be published which, besides introducing a number of other minor amendments, will specify the new widths across flats conforming to ISO 272. In both DIN and DIN ISO Standards attention will be drawn to the fact that the relevant ISO Standards are to be preferred and that the DIN Standard is to be replaced after a transition period of 5 years.

If no relevant ISO Standard is available, the DIN Standard will contain a foreword stating that the previous width across flats specifications are to be withdrawn after a transition period of 5 years and replaced by those specified in ISO 272.

This sets a time limit for both manufacturer and user of hexagon products by which the changeover to the new widths across flats must be effected. The responsible committee is of the opinion, that it will still be possible after this period to obtain fasteners complying with the superseded specifications as spare parts.

In some cases, the replacement of the previous DIN Standards by the relevant ISO Standards will have further consequences, besides the changeover to the new widths across flats, attention being drawn to this circumstance in the national foreword of the relevant DIN ISO Standards. These consequences result from the fact that the ISO Standards have not yet reached the same level of completeness as the DIN Standards. Thus a number of nominal sizes, as well as several product specifications for fine pitch threads are not found in the ISO product standards. Furthermore, ISO Standards on technical delivery conditions are still in the initial stages, so that specific requirements are still subject to separate agreement when ordering products in accordance with ISO Standards, as they are not included in the designation for order purposes.

Besides these consequences, which are of importance when applying the new ISO Standards, the amendment of the widths across flats also has a number of consequences as regards the use of the new products which the designer must take into consideration. Besides the amended assembly sizes, this applies above all to the different surface pressure for the bearing area of the nut or the heads of the bolts. These difficulties are discussed in Recommendation VDA 262*) published by the *Verband der Automobilindustrie e.V.* (German Automobile Manufacturers Association).

International Patent Classification

F 16 B 37/00
F 16 B 39/02

*) Obtainable from: *Dokumentation Kraftfahrwesen e.V.*, Grönerstraße 5, D-7140 Ludwigsburg.

UDC 621.882.32 October 1987

Hexagon slotted nuts with metric coarse pitch thread

Product grade C

DIN 935 Part 3

Kronenmuttern; metrisches Regelgewinde; Produktklasse C

Supersedes December 1983 edition.

In keeping with current practice in standards published by the International Organization for Standardization (ISO), a comma has been used throughout as the decimal marker.

The new widths across flats 16 mm, 18 mm, 21 mm and 34 mm as specified in ISO 272 shall be used instead of the previous widths across flats 17 mm, 19 mm, 22 mm and 32 mm for thread sizes M 10, M 12, M 14 and M 22; see example of designation in clause 4.

It is intended to omit the obsolescent widths across flats by 1 July 1992 at the latest. In this standard, this applies to width across flats 19 mm specified for M 12.

Dimensions in mm

1 Field of application

This standard specifies requirements for M 12 to M 33 hexagon slotted nuts, assigned to product grade C.

If, in special cases, nuts are to comply with specifications other than those given in this standard, e.g. regarding property class, they shall be selected in accordance with the relevant standards.

2 Dimensions

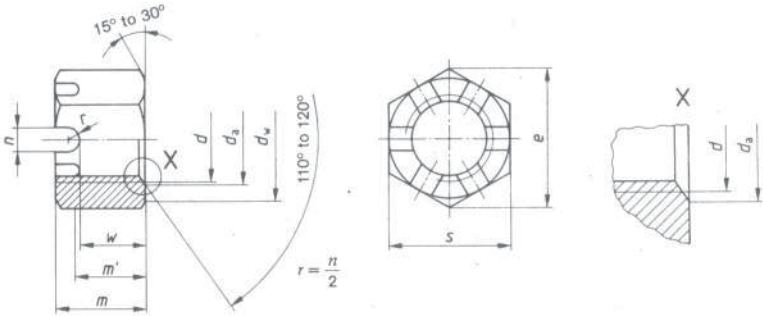

m' = minimum wrenching height.

The bottom of the slots, at the manufacturer's descretion, may be rounded or chamfered. Hexagon slotted nuts may be supplied with the slotted part threaded or unthreaded.

Continued on pages 2 to 4

Thread size (d)		M 12		M 16	M 20	M 24	(M 27)	M 30	(M 33)
P[1])		1,75		2	2,5	3	3	3,5	3,5
d_a	min.	12		16	20	24	27	30	33
	max.	13		17,3	21,6	25,9	29,2	32,4	35,6
d_w	min.	16,1	17	21,7	27,7	33,2	38	42,7	46,6
e	min.	19,85	20,88	26,17	32,95	39,55	45,2	50,85	55,37
m	max. = nominal size	15		19	22	27	30	33	35
	min.	13,2		16,9	19,9	24,9	27,9	30,5	32,5
m'	min.	10,6		13,5	15,9	19,9	22,3	24,4	26
n	min.	3,5		4,5	4,5	5,5	5,5	7	7
	max.	3,98		4,98	4,98	5,98	5,98	7,58	7,58
s	max. = nominal size	18	19	24	30	36	41	46	50
	min.	17,57	18,48	23,16	29,16	35	40	45	49
w	min.	9,48		12,3	15,3	18,16	21,16	23,16	25,16
	max.	10		13	16	19	22	24	26
Split pin as in DIN 94[2])		3,2 × 22		4 × 28	4 × 36	5 × 40	5 × 45	6,3 × 50	6,3 × 56

Sizes in brackets should be avoided where possible.

[1]) P = pitch of thread.

[2]) The split pin lengths have been given for guidance only.

Number of slots: 6.

3 Technical delivery conditions

Material		Steel
General requirements		As specified in DIN 267 Part 1.
Thread	Tolerance	7H[1])
	As specified in	DIN 13 Parts 12 and 15.
Mechanical properties	Property class (material)	For sizes up to M16: 5; for larger sizes : 4.
	As specified in	ISO 898 Part 2.
Limit deviations, geometrical tolerances	Product grade	C
	As specified in	ISO 4759 Part 1.
Surface finish		DIN 267 Part 2 shall apply with regard to surface roughness. DIN 267 Part 21 shall apply with regard to the widening test. DIN 267 Part 9 shall apply with regard to electroplating.[1]) DIN 267 Part 10 shall apply with regard to hot dip galvanizing.
Acceptance inspection		DIN 267 Part 5 shall apply with regard to acceptance inspection.

[1]) Where a protective coating is applied, e.g. an electroplated coating complying with DIN 267 Part 9, depending on the coating thickness required, it may be necessary, particularly in the case of tolerance class 7H nuts, to select a larger fundamental deviation than that assigned to the H position (see DIN 267 Part 9). This, however, might impair the resistance of the bolt/nut assembly to stripping.

4 Designation

Designation of an M 20 hexagon slotted nut assigned to property class 4:

Hexagon slotted nut DIN 935 – M 20 – 4

This designation signifies that the width across flats for size M 12 is that hitherto specified, viz. 19 mm. If the nuts are to be supplied with the new width across flats, 18 mm, as specified in ISO 272, the width across flats (SW 18) shall be included in the designation, e.g.:

Hexagon slotted nut DIN 935 – M 12 – SW 18 – 5

The DIN 4000 – 2 – 7 tabular layout of article characteristics shall apply for nuts covered in this standard.

5 Mass

The values of mass given for steel nuts are for guidance only.

Thread size (d)	M 12		M 16	M 20	M 24	M 27	M 30	M 33
Mass (7,85 kg/dm^3) per 1000 units, in kg, ≈	–	25	44	82	142	208	295	352

Standards referred to

DIN 13 Part 12	ISO metric screw threads; coarse and fine pitch threads with diameters from 1 to 300 mm; selection of diameters and pitches
DIN 13 Part 15	ISO metric screw threads; fundamental deviations and tolerances for screw threads of 1 mm diameter and larger
DIN 94	Split pins
DIN 267 Part 1	Fasteners; technical delivery conditions; general requirements
DIN 267 Part 2	Fasteners; technical delivery conditions; types of finish and dimensional accuracy
DIN 267 Part 5	Fasteners; technical delivery conditions; acceptance inspection (modified version of ISO 3269, 1984 edition)
DIN 267 Part 9	Fasteners; technical delivery conditions; electroplated components
DIN 267 Part 10	Fasteners; technical delivery conditions; hot dip galvanized components
DIN 267 Part 21	Fasteners; technical delivery conditions; widening test for nuts
DIN 4000 Part 2	Tabular layout of article characteristics for bolts, screws and nuts
ISO 272	Fasteners; hexagon products, widths across flats
ISO 898 Part 2	Mechanical properties of fasteners; nuts with specified proof load values
ISO 4759 Part 1	Tolerances for fasteners; bolts, screws and nuts with thread diameters $\geq$ 1,6 and $\leq$ 150 mm; product grades A, B and C

Previous editions

DIN Kr 753: 12.34, 09.36; DIN 533 Part 1: 01.41, 09.59, 06.63; DIN 534 Part 1: 01.41x, 06.63; DIN 935: 05.68, 04.77; DIN 935 Part 1: 01.26, 04.34, 06.37, 04.42x, 02.54, 05.56, 06.63; DIN 935 Part 3: 12.83.

Amendments

In comparison with the December 1983 edition, a note on the period of validity of the previous widths across flats has been included.

Explanatory notes

For more than 20 years efforts have been directed towards the achievement of the international interchangeability of fasteners by preparing international standards for the product concerned. ISO Standards have now been published for the most important types of fasteners (see ISO Standards Handbook 18).

However, international efforts only serve a useful purpose if national standards are adapted as far as possible to international standards, or, ideally, replaced by them. Current DIN Standards already agree in substance with the relevant ISO Standards, but still differ in some respects, as for instance in the widths across flats for hexagon products.

The Federal Republic of Germany adopted International Standard ISO 272 on widths across flats as national standard DIN ISO 272 in October 1979. Nevertheless, widths across flats deviating from DIN ISO 272 are still being used in Germany for nominal sizes M 10, M 12, M 14 and M 22. The table below compares the previous widths across flats with the new ones specified for the four nominal sizes referred to.

Thread size	M 10	M 12	M 14	M 22
Previous width across flats, in mm	17	19	22	32
New width across flats as in ISO 272, in mm	16	18	21	34

The manufacturers and users of hexagon products participating in the work of the *Normenausschuß Mechanische Verbindungselemente* (Fasteners Standards Committee), together with representatives of the dealers in fasteners, have decided to introduce the new widths across flats in all relevant product standards. Since experience has shown, that the introduction of the new widths across flats has not been advanced by their inclusion in DIN Standards merely as preferred alternatives to the previous widths across flats, the following decisions have been reached to accelerate the changeover procedure.

Supplementary to current DIN Standards specifying the previous widths across flats, DIN ISO Standards dealing with the same products will, wherever ISO Standards are available, be published which, besides introducing a number of other minor amendments, will specify the new widths across flats conforming to ISO 272. In both DIN and DIN ISO Standards attention will be drawn to the fact that the relevant ISO Standards are to be preferred and that the DIN Standard is to be replaced after a transition period of 5 years.

If no relevant ISO Standard is available, the DIN Standard will contain a foreword stating that the previous width across flats specifications are to be withdrawn after a transition period of 5 years and replaced by those specified in ISO 272.

This sets a time limit for both manufacturer and user of hexagon products by which the changeover to the new widths across flats must be effected. The responsible committee is of the opinion, that it will still be possible after this period to obtain fasteners complying with the superseded specifications as spare parts.

In some cases, the replacement of the previous DIN Standards by the relevant ISO Standards will have further consequences, besides the changeover to the new widths across flats, attention being drawn to this circumstance in the national foreword of the relevant DIN ISO Standards. These consequences result from the fact that the ISO Standards have not yet reached the same level of completeness as the DIN Standards. Thus a number of nominal sizes, as well as several product specifications for fine pitch threads are not found in the ISO product standards. Furthermore, ISO Standards on technical delivery conditions are still in the initial stages, so that specific requirements are still subject to separate agreement when ordering products in accordance with ISO Standards, as they are not included in the designation for order purposes.

Besides these consequences, which are of importance when applying the new ISO Standards, the amendment of the widths across flats also has a number of consequences as regards the use of the new products which the designer must take into consideration. Besides the amended assembly sizes, this applies above all to the different surface pressure for the bearing area of the nut or the heads of the bolts. These difficulties are discussed in Recommendation VDA 262*) published by the *Verband der Automobilindustrie e.V.* (German Automobile Manufacturers Association).

International Patent Classification

F 16 B 35/00

*) Obtainable from: *Dokumentation Kraftfahrwesen e.V.*, Grönerstraße 5, D-7140 Ludwigsburg.