UDC 621.882.219 : 621.882.211 January 1992

Heavy-duty hexagon head screw plugs

DIN 910

Verschlußschrauben mit Bund und Außensechskant;
schwere Ausführung, zylindrisches Gewinde

Supersedes DIN 910 Part 1, June 1983 edition.

In keeping with current practice in standards published by the International Organization for Standardization (ISO), a comma has been used throughout as the decimal marker.

Dimensions in mm

1 Scope and field of application

This standard specifies dimensions and technical delivery conditions for screw plugs which are intended to be screwed into holes with parallel thread as specified in DIN 13 Part 5, 6 or 7, or ISO 228-1. Such plugs may be used together with seal rings as specified in DIN 7603, type and material of which are to be selected as a function of the operating conditions (e.g. pressure, temperature, fluid with which the threaded parts are in contact, etc.).

2 Dimensions and designation

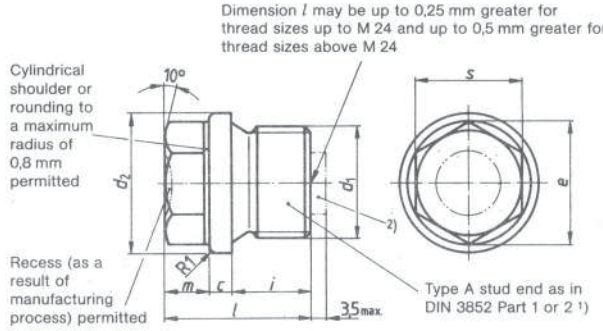

Designation of an M 20 × 1,5 steel (St) screw plug:

Screw plug DIN 910 – M 20 × 1,5 – St

Designation of a G ½ A steel (St) screw plug:

Screw plug DIN 910 – G ½ A – St

---

1) Where required, screw plugs may be supplied with type B stud end complying with the specifications of DIN 3852 Part 1 or 2. The designation will then read, for example:
Screw plug DIN 910 – B – M 20 × 1,5 – St

2) Screw plugs may be supplied with an integral permanent magnet (PM), which may protrude to a maximum of 3,5 mm. The type and dimensions of the magnet and the space to receive it are at the manufacturer's discretion. The designation of a screw plug with an integral permanent magnet will then read, for example:
Screw plug DIN 910 – M 20 × 1,5 – St – PM

Continued on pages 2 and 3

Thread size (d_1) as in DIN 13 Part 5, 6 or 7 (metric fine pitch thread)		Thread size (d_1) as in ISO 228-1 (pipe thread)	c +0,5 0	d_2 h14	e min.	i ±0,2	l ≈	m ±½ IT 15	s	s Tolerance	Approximate mass (7,85 kg/dm³) per 1000 units, in kg
M 10 × 1	–	**G ⅛ A**	3	14	10,89	8	17	6	10	h14	12,0
M 12 × 1,5	–	–	3	17	14,20	12	21	6	13		20,3
–	–	**G ¼ A** [2]	3	18	14,20	8	17	6	13		20,0
–	–	**G ¼ A**	3	18	14,20	12	21	6	13		23,8
M 14 × 1,5	–	–	3	19	14,20	12	21	6	13		25,0
M 16 × 1,5	–	–	3	21	18,72	12	21	6	17		35,2
–	–	**G ⅜ A** [2]	3	22	18,72	8	17	6	17		32,2
–	–	**G ⅜ A**	3	22	18,72	12	21	6	17		38,1
M 18 × 1,5	–	–	4	23	18,72	12	24	8	17		48,6
M 20 × 1,5	**M 20 × 2** [1]	–	4	25	20,88	14	26	8	19		64,5
–	–	**G ½ A** [2]	4	26	20,88	10	22	8	19		57,8
–	–	**G ½ A**	4	26	20,88	14	26	8	19		66,6
M 22 × 1,5	–	–	4	27	20,88	14	26	8	19		73,4
M 24 × 1,5	–	–	4	29	23,91	14	27	9	22	h15	93,5
M 26 × 1,5	–	–	4	31	26,17	16	30	10	24		120
–	–	**G ¾ A** [2]	4	32	26,17	12	26	10	24		109
–	**M 27 × 2**	**G ¾ A**	4	32	26,17	16	30	10	24		127
M 30 × 1,5	**M 30 × 2**	–	4	36	26,17	16	30	10	24		148
–	**M 33 × 2**	**G 1 A**	5	39	29,56	16	32	11	27		195
M 36 × 1,5	**M 36 × 2**	–	5	42	29,56	16	32	11	27		220
M 38 × 1,5	–	**G 1⅛ A**	5	44	29,56	16	32	11	27		238
–	**M 39 × 2**	–	5	46	29,56	16	32	11	27		255
M 42 × 1,5	**M 42 × 2**	**G 1¼ A**	5	49	32,95	16	33	12	30		300
M 45 × 1,5	**M 45 × 2**	–	5	52	32,95	16	33	12	30		340
M 48 × 1,5	**M 48 × 2**	**G 1½ A**	5	55	32,95	16	33	12	30		375
M 52 × 1,5	**M 52 × 2**	–	5	60	32,95	16	33	12	30		430
–	–	**G 1¾ A**	5	62	39,55	20	40	15	36		572
–	**M 56 × 2**	–	5	64	39,55	20	40	15	36		620
–	**M 60 × 2**	**G 2 A**	5	68	39,55	20	40	15	36		695
–	**M 64 × 2**	–	5	72	39,55	20	40	15	36		774

1) Only for tapped holes in indicator valves as specified in DIN 6273.

2) This size (with short stud end) is not recommended. Where the purchaser, however, requires such a size, the stud length, i, shall be stated in the designation, e.g.:

Screw plug DIN 910 – G ¼ A × 8 – St

3 Material

Screw plugs shall be manufactured from 9 SMnPb 28 K steel as in DIN 1651 or UQSt 36 steel as in DIN 17 111 (St), at the manufacturer's discretion, stainless steel (A1) as in DIN 267 Part 11, aluminium alloy (Al) as in DIN 267 Part 18, copper-zinc alloy (CuZn) as in DIN 267 Part 18, or from polyamide (PA).

Use of other materials or material grades shall be the subject of agreement.

4 Product grade, surface roughness, width across flats and tolerances

Screw plugs shall be manufactured to the general tolerances, accuracy grade c, as specified in ISO 2768 Part 1, be of product grade B as specified in ISO 4749 Part 1 and have a surface roughness complying with the specifications of DIN 267 Part 2. The widths across flats shall comply with DIN 475 Part 1.

5 Surface finish

DIN 267 Part 9 shall apply with regard to electroplating and DIN 50 942, with regard to phosphating, other finishes being subject to agreement.

6 General requirements

Screw plugs shall comply with the general requirements specified in DIN 267 Part 1.

7 Acceptance inspection

DIN 267 Part 5 shall apply with regard to acceptance inspection.

Standards referred to

DIN	13 Part 5	ISO metric screw threads; 1 mm and 1,25 mm fine pitch threads with diameters from 7,5 mm to 200 mm; nominal sizes
DIN	13 Part 6	ISO metric screw threads; 1,5 mm fine pitch threads with diameters from 12 mm to 300 mm; nominal sizes
DIN	13 Part 7	ISO metric screw threads; 2 mm fine pitch threads with diameters from 17 mm to 300 mm; nominal sizes
DIN	267 Part 1	Fasteners; technical delivery conditions; general requirements
DIN	267 Part 2	Fasteners; technical delivery conditions; product grades and tolerances
DIN	267 Part 5	Fasteners; technical delivery conditions; acceptance inspection (modified version of ISO 3269 : 1984)
DIN	267 Part 9	Fasteners; technical delivery conditions; electroplated components
DIN	267 Part 11	Fasteners; technical delivery conditions; stainless and acid-resistant steel components (with addenda to ISO 3506)
DIN	267 Part 18	Fasteners; technical delivery conditions; non-ferrous metal components
DIN	475 Part 1	Widths across flats for screws, bolts, valves and fittings
DIN	1651	Free cutting steel; technical delivery conditions
DIN	3852 Part 1	Stud ends, tapped holes and screw plugs for compression couplings and valves, with metric fine pitch thread; dimensions
DIN	3852 Part 2	Stud ends, tapped holes and screw plugs for compression couplings and valves, with pipe thread; dimensions
DIN	6273	General-purpose internal combustion engines; indicator valves
DIN	7603	Sealing rings for compression couplings and screw plugs
DIN	17 111	Low carbon unalloyed steel for bolts, nuts and rivets; technical delivery conditions
DIN	50 942	Phosphating of metals; methods of test
ISO	228-1 : 1982	Pipe threads where pressure-tight joints are not made on the threads; designation, dimensions and tolerances
ISO	2768-1 : 1989	Tolerances for linear and angular dimensions without individual tolerance indications
ISO	4759-1 : 1978	Tolerances for fasteners; bolts, screws, and nuts with thread diameters from 1,6 to 150 mm and product grades A, B and C

Other relevant standards

DIN	906	Hexagon socket pipe plugs
DIN	908	Hexagon socket screw plugs
DIN	909	Hexagon head screw plugs
DIN	5586	Compressed-air equipment for rail vehicles; screw plugs with vent
DIN	7604	Light-duty hexagon head screw plugs

Previous editions

DIN 910: 04.25, 04.56, 09.59; DIN 910 Part 1: 12.43, 01.73, 06.83; DIN 910 Part 2: 04.25x.

Amendments

The following amendments have been made to the June 1983 edition of DIN 910 Part 1.

a) DIN 910 Part 1 has been superseded by the present standard.

b) The standard has been editorially revised.

International Patent Classification

B 65 D 39/08
F 16 B 35/00
F 16 J 13/12