UDC 621.882.219 : 621.882.211 January 1992

Hexagon head pipe plugs

DIN 909

Verschlußschrauben mit Außensechskant; kegeliges Gewinde;

Supersedes June 1983 edition.

In keeping with current practice in standards published by the International Organization for Standardization (ISO), a comma has been used throughout as the decimal marker.

Dimensions in mm

1 Scope and field of application

This standard specifies dimensions and technical delivery conditions for pipe plugs which are intended to be screwed into holes with parallel thread as specified in DIN 13 Part 12, DIN 158, DIN 3858 or ISO 228 Part 1. Since tightness is a function of pressure, temperature, the materials involved and the fluid with which the threaded parts are in contact, such connections cannot be assumed to be tight. Therefore, it is recommended that a sealant or seal ring should be provided where the hole has a thread as specified in DIN 13 Part 12.

Note. For pipe plugs for use in gas and water supply systems, see *Technische Regeln für Gasinstallationen* (DVGW Code of practice for gas supply installations) [1] and DIN 1988 Part 2.

2 Dimensions and designation

Plugs with d_1 up to 18 mm

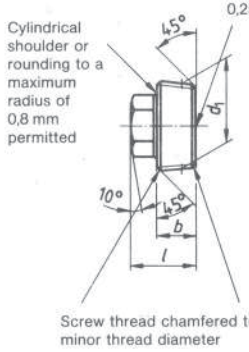

Plugs with d_1 equal to 20 mm or more

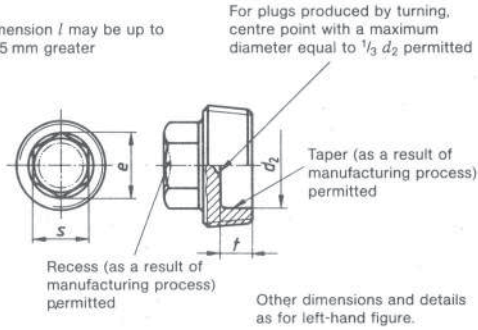

Designation of an M 20 × 1,5 steel (St) pipe plug:

Pipe plug DIN 909 – M 20 × 1,5 – St

Designation of an R 1/2 steel (St) pipe plug:

Pipe plug DIN 909 – R 1/2 – St

[1] Obtainable from *ZfGW-Verlag GmbH*, Voltastraße 79, D-6000 Frankfurt (Main) 90.

Continued on pages 2 and 3

Thread size (d)			b	d_2	e	l	s		t	Approximate mass (7,85 kg/dm³) per 1000 units, in kg
as in DIN 158 (metric taper thread) (short thread)		as in DIN 3858 (pipe thread, tolerance position 2) (short thread)	js 16	$^{+1}_{0}$	min.	js 16		Tolerance	$^{0}_{-1}$	
M 10 × 1	–	R 1/4	8	–	7,66	12,5	7	h 13	–	5,72
M 12 × 1,5	–	–	10	–	7,66	15	7		–	9,10
–	–	R 1/8	10	–	9,76	15	9		–	12,0
M 14 × 1,5	–	–	10	–	9,76	15	9		–	13,2
M 16 × 1,5	–	–	10	–	10,89	16	10		–	17,9
–	–	R 3/8	10	–	10,89	16	10		–	19,4
M 18 × 1,5	–	–	10	–	10,89	16	10		–	21,9
M 20 × 1,5	–	–	10	12	14,20	17	13		6	25,0
–	–	R 1/2	10	12	14,20	17	13	h 14	6	27,2
M 22 × 1,5	–	–	10	14	14,20	17	13		6	29,0
M 24 × 1,5	–	–	12	16	18,72	20	17		7	43,8
(M 26 × 1,5)	–	–	12	16	18,72	20	17		7	50,9
–	M 27 × 2	R 3/4	12	16	18,72	20	17		7	51,8
M 30 × 1,5	M 30 × 2	–	12	20	20,88	22	19		7	69,4
–	M 33 × 2	R 1	12	23	20,88	22	19		7	76,2
M 36 × 1,5	M 36 × 2	–	15	26	26,17	27	24		10	118
(M 38 × 1,5)	–	–	15	28	26,17	27	24		10	125
–	M 39 × 2	–	15	28	26,17	27	24		10	130
M 42 × 1,5	M 42 × 2	R 1 1/4	18	32	26,17	30	24		13	151
M 45 × 1,5	M 45 × 2	–	18	35	26,17	30	24	h 15	13	163
M 48 × 1,5	M 48 × 2	R 1 1/2	20	38	32,95	35	30		15	230
M 52 × 1,5	M 52 × 2	–	20	42	32,95	35	30		15	249
–	M 56 × 2	–	22	46	32,95	37	30		17	275
–	M 60 × 2	–	22	50	32,95	37	30		17	296

3 Material

Pipe plugs shall be manufactured from 9 SMnPb 28 K steel as in DIN 1651 or UQSt 36 steel as in DIN 17 111 (St), at the manufacturer's discretion, stainless steel (A 1) as in DIN 267 Part 11, aluminium alloy (Al) as in DIN 267 Part 18, copper-zinc alloy (CuZn) as in DIN 267 Part 18, from polyamide (PA).

Use of other materials or material grades shall be the subject of agreement.

4 Product grade, surface roughness, width across flats and tolerances

Pipe plugs shall be manufactured to the general tolerances, accuracy grade c, as specified in ISO 2768 Part 1, be of product grade B as specified in ISO 4759 Part 1 and have a surface roughness complying with the specifications of DIN 267 Part 2. The widths across flats shall comply with DIN 475 Part 1.

5 Surface finish

DIN 267 Part 9 shall apply with regard to electroplating and DIN 50 942, with regard to phosphating, other finishes being subject to agreement.

6 General requirements

Pipe plugs shall comply with the general requirements specified in DIN 267 Part 1.

7 Acceptance inspection

DIN 267 Part 5 shall apply with regard to acceptance inspection.

Standards and other documents referred to

DIN 13 Part 12	ISO metric screw threads; coarse and fine pitch threads with diameters from 1 to 300 mm; selected diameters and pitches
DIN 158	Metric taper external screw threads, with mating parallel internal screw threads; nominal dimensions and limit deviations
DIN 267 Part 1	Fasteners; technical delivery conditions; general requirements
DIN 267 Part 2	Fasteners; technical delivery conditions; product grades and tolerances
DIN 267 Part 5	Fasteners; technical delivery conditions; acceptance inspection (modified version of ISO 3269 : 1984)
DIN 267 Part 9	Fasteners; technical delivery conditions; electroplated components
DIN 267 Part 11	Fasteners; technical delivery conditions; stainless and acid-resistant steel components (with addenda to ISO 3506)
DIN 267 Part 18	Fasteners; technical delivery conditions; non-ferrous metal components
DIN 475 Part 1	Widths across flats for screws, bolts, valves and fittings
DIN 1651	Free cutting steel; technical delivery conditions
DIN 1988 Part 2	Drinking water supply systems; materials, components and appliances; design and installation (DVGW Code of practice)
DIN 3858	Whitworth pipe threads; parallel internal thread and taper external thread for pipe unions
DIN 17 111	Low carbon unalloyed steel for bolts, nuts and rivets; technical delivery conditions
DIN 50 942	Phosphating of metals; methods of test
ISO 228-1 : 1982	Pipe threads where pressure-tight joints are not made on the threads; designation, dimensions and tolerances
ISO 2768-1 : 1989	Tolerances for linear and angular dimensions without individual tolerances indications
ISO 4759-1 : 1978	Tolerances for fasteners; bolts, screws, and nuts with thread diameters from 1,6 to 150 mm and product grades A, B and C

Technische Regeln für Gasinstallationen

Other relevant standards

DIN 906	Hexagon socket pipe plugs
DIN 908	Hexagon socket screw plugs
DIN 910	Heavy-duty hexagon head screw plugs
DIN 5 586	Compressed-air equipment for rail vehicles; screw plugs with vent
DIN 7 604	Light-duty hexagon head screw plugs

Previous editions

DIN 909: 12.43, 04.56, 01.73, 06.83.

Amendments

The following amendments have been made to the June 1983 edition.

a) Reference has been made to *Technische Regeln für Gasinstallationen*.

b) For a width across flats of 7 mm, dimension e_{min} has been amended.

c) The standard has been editorially revised.

International Patent Classification

B 65 D 39/04
B 65 D 39/08
F 16 B 35/00
F 16 J 13/12