DIN741 WIRE ROPE CLIPS



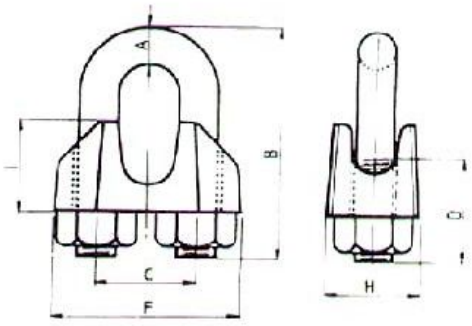

SIZE	A	B	C	D	F	H	I	KGS/100PCS	GUNNY	CARTON
3	4	20	9	12	21	10	10	1.4	2000	100×18=1800
5	5	24	11	13	23	11	10	1.5	1000	100×18=1800
6.5	5	28	13	15	26	12	11	2.1	1000	100×12=1200
8	6	34	16	19	30	14	15	4.1	800	100×8=800
10	8	42	19	22	34	18	17	6.8	300	20×18=3600
11	8	44	20	22	36	19	18	7.2	250	20×18=3600
13	10	55	24	30	42	23	21	13	200	20×8=160
14	10	57	25	30	44	23	22	13.5	200	20×8=160
16	12	63	29	33	50	26	26	21	100	10×8=80
19	12	75	32	38	54	29	30	28	100	10×6=60
22	14	85	37	44	61	33	34	40	50	10×6=60
26	14	95	41	45	65	35	37	44	50	10×6=60
30	16	110	48	50	74	37	43	66	50	LOSE
34	16	120	52	55	80	42	50	85	45	LOSE
40	16	140	58	60	88	45	55	104	25	LOSE