No guarantee can be given in respect of this translation
In all cases the latest German-language version of this standard shall be taken as authoritative

UDC 621.887.6

DEUTSCHE NORMEN

September 1955

DIN 705

Bright Set Collars Locked by Grub Screws or by Pins Light Pattern Series

Blanke Stellringe; Befestigung durch Gewindestifte oder Stifte, Leichte Reihe

Dimensions in mm

A Locked by grub screws

d_1 = 2 to 70 mm: locked by a single grub screw
d_1 = 72 to 200 mm: locked by two grub screws

B Locked by taper pins

up to d_1 = 150 mm

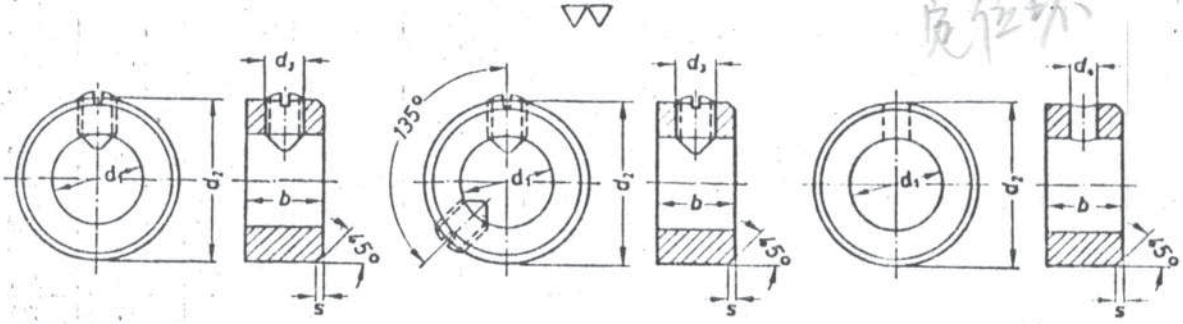

Designation of a set collar, Type A, with bore d_1 = 20 mm with grub screw:
Set Collar A 20 DIN 705

Bore d_1 H8	b j14	d_2 h13	d_3	d_4 H11[1])	s	For Type A grub screw to DIN 553	For Type B grooved taper pin to DIN 1471	For Type B taper pin to DIN 1	Weight (7.85 kg/dm³) kg/100 pieces For Type A	Weight (7.85 kg/dm³) kg/100 pieces For Type B
2	3,5	6	M 2	0,6	0,4	M 2 × 3	–	0,6 × 8	0,069	0,065
2,5	4	7	M 2	0,8	0,4	M 2 × 3	–	0,8 × 10	0,105	0,096
3	5								0,123	0,115
3,5	5	8	M 2,6	1	0,4	M 2,6 × 4	–	1 × 10	0,162	0,155
4									0,152	0,145
4,5	6	10	M 3	1,5	0,4	M 3 × 4	1,5 × 10	1,5 × 12	0,296	0,289
5									0,280	0,273
5,5	6	12	M 4	1,5	0,4	M 4 × 5	1,5 × 12	1,5 × 14	0,432	0,414
6	8								0,548	0,526
7	8								0,488	0,564
8	8	16	M 4	2	1	M 4 × 6	2 × 16	2 × 20	0,940	0,920
9	10	18	M 5	3	1	M 5 × 8	3 × 18	3 × 22	1,51	1,45
10	10	20	M 5	3	1	M 5 × 8	3 × 20	3 × 24	1,85	1,80
11									1,73	1,66
12	12	22	M 6	4	1	M 6 × 8	4 × 22	4 × 26	2,52	2,44
14	12	25	M 6	4	1	M 6 × 8	4 × 25	4 × 30	3,17	3,09
15									2,98	2,88
16	12	28	M 6	4	1,6	M 6 × 8	4 × 28	4 × 32	3,84	3,76
18	14	32	M 6	5	1,6	M 6 × 8	5 × 32	5 × 36	6,00	5,84
20									5,30	5,20
22	14	36	M 6	5	1,6	M 6 × 10	5 × 36	5 × 40	6,90	6,79

Table continued on page 2

Bold type indicates preferred sizes.

[1]) Up to 3 mm tolerance zone H 9 applies

Continued on page 2

Nachdruck, auch auszugsweise, nur mit Genehmigung des DIN Deutsches Institut für Normung e. V., Berlin 30, gestattet.

Translation: Fachtechnisches Übersetzungsinstitut Henry G. Freeman, Düsseldorf

Alleinverkauf der Normen durch Beuth Verlag GmbH, Berlin 30 und Köln 1
11.77

Bore d_1 H8	b j14	d_2 h13	d_3	d_4 H11	s	For Type A grub screw to DIN 553	For Type B grooved taper pin to DIN 1471	For Type B taper pin to DIN 1	Weight (7.85 kg/dm³) kg/100 pieces ≈ For Type A	Weight (7.85 kg/dm³) kg/100 pieces ≈ For Type B
24	16	40	M 8	6	1,6	M 8×10	6× 40	6× 45	10,0	9,80
25									9,56	9,32
26									9,05	8,83
28	16	45	M 8	6	1,6	M 8×12	6× 45	6× 50	12,2	11,9
30									11,1	10,8
32	16	50	M 8	8	1,6	M 8×12	8× 50	8× 55	14,5	14,0
34									13,2	12,8
35	16	56	M 8	8	1,6	M 8×12	8× 55	8× 60	18,7	18,2
36									18,0	17,6
38									16,6	16,2
40	18	63	M 10	8	1,6	M 10×15	8× 60	8× 70	26,1	25,6
42									24,4	23,8
45	18	70	M 10	8	1,6	M 10×15	8× 70	8× 80	31,7	31,0
48									28,7	28,1
50	18	80	M 10	10	1,6	M 10×15	10× 80	10× 90	42,9	42,1
52									40,8	39,9
55									37,3	36,4
56									36,1	35,2
58	20	90				M 10×18	10× 90	10×100	58,1	57,1
60									55,2	54,3
63									50,8	49,8
65		100					10×100	10×110	70,8	69,8
68									66,0	65,0
70									62,6	61,6
72	22	110	M 12	10	2,5	M 12×20	10×110	10×120	92,8	91,8
75									87,1	86,0
80									76,8	75,5
85		125		13			13×125	13×140	113	111
90									101	99,0
95	25	140				M 12×22	13×140	13×150	161	159
100									147	145
110		160					13×160	13×180	206	204
120									171	169
125	28	180	M 16	16	4	M 16×28	16×180	16×200	285	282
130									264	260
140		200				M 16×30	16×200	16×230	347	343
150									298	294
160	32	220	M 20×2	–		M 20×2×35	–	–	446	–
170		250				M 20×2×40	–	–	657	–
180									590	–
190		280				M 20×2×45	–	–	831	–
200									756	–

Bold type indicates preferred sizes

Material: Mild steel at manufacturer's choice

Set collars to Type A are furnished with grub screws to DIN 553.

Projecting grub screws shall not be used if any risk of accident is likely to arise thereby.

Thread: Metric screw thread to DIN 13 Part 1

For heavy pattern set collars, see DIN 703