UDC 621.882.215.4.082.8

DEUTSCHE NORMEN

July 1970

No guarantee can be given in respect of this translation
In all cases the latest German-language version of this standard shall be taken as authoritative

Raised Countersunk (Oval) Head Tapping Screws with Slot

DIN 7973

Linsensenk-Blechschrauben mit Schlitz

For connection with an ISO Recommendation in preparation, see Explanations

Dimensions in mm

Type B with cone end

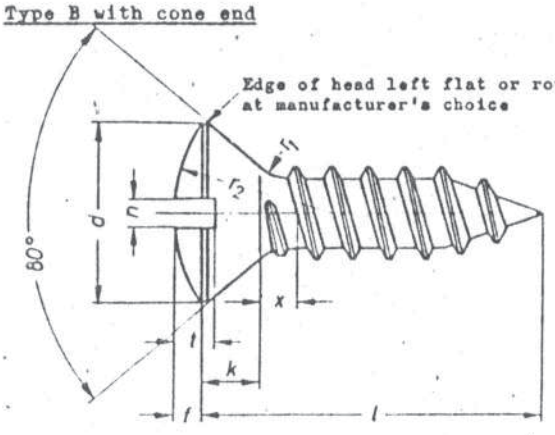

Type BZ with flat end

other dimensions and details as for Type B

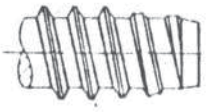

$x_{max.} = P$ according to DIN 7970

Designation of a raised countersunk (oval) head tapping screw with cone end (B) of 3.5 mm nominal diameter and length l = 19 mm:

Tapping screw B 3.5 × 19 DIN 7973

Nominal diameter		2,2	2,9	3,5	(3,9)	4,2	4,8	(5,5)	6,3
d		4,3	5,5	6,8	7,5	8,1	9,5	10,8	12,4
f	≈	0,7	0,9	1,2	1,3	1,4	1,5	1,7	2
k	≈	1,3	1,7	2,1	2,3	2,5	3	3,4	3,8
n		0,6	0,8	1	1	1,2	1,2	1,6	1,6
r_1	max.	0,8	1,1	1,4	1,5	1,6	1,9	2,1	2,4
r_2		3,8	4,6	5,4	6	6,6	8,2	9,4	11,1
t	min.	0,95	1,25	1,55	1,7	1,85	2,15	2,45	2,85
	max.	1,15	1,5	1,9	2,05	2,25	2,6	2,95	3,45
l		Weight (7,85 kg/dm³) kg/1000 pieces ≈							
4,5		0,140	—	—	—	—	—	—	—
6,5		0,180	0,332	—	—	—	—	—	—
9,5		0,240	0,440	0,720	0,890	1,07*)	1,88*)	—	—
13		0,310	0,566	0,900	1,11	1,32	2,18	3,12*)	4,00*)
16		0,370	0,674	1,05	1,30	1,53	2,48	3,50	4,54
19			0,782	1,20	1,49	1,74	2,78	3,89	5,08
22				1,35	1,68	1,95	3,08	4,28	5,62
25				1,50	1,87	2,16	3,78	5,19	6,88
32						2,65	4,38	5,97	7,96
38							5,08	6,88	9,24
45									
50									
No according to ISO		2	4	6	7	8	10	12	14

Bracketed nominal diameters should be avoided wherever possible.

Normally, these tapping screws are made in the sizes for which weight details are given. It is not practicable to make the sizes for which dashes appear instead of length data.

Technical conditions of delivery and material according to DIN 267 Sheet 12 (at present circulating as draft).

Type: m according to DIN 267 Sheet 2

Thread and screw ends according to DIN 7970
For core hole diameters see DIN 7975

*) It is not practicable to make these sizes in Type B.

Explanations on page 2

Nachdruck, auch auszugsweise, nur mit Genehmigung des Deutschen Normenausschusses, Berlin 30, gestattet.

Translation
Fachtechnisches Übersetzungsinstitut
Henry G. Freeman, Düsseldorf

Explanations

The present new issue of this Standard agrees essentially with the ISO draft

Draft ISO Recommendation No 1483
Raised countersunk (oval) head tapping screws, metric and inch series
Vis à tôle à tête fendue fraisée bombée, Dimensions en millimètres et en inches

This ISO draft has been adopted by the International Organization for Standardization (ISO) and appropriate ISO Recommendations are at present being prepared. The basis for these are American standards which have already been adopted in many countries and which also formed the basis of the issues of DIN 7971, DIN 7972 and DIN 7973 in use hitherto. This process has not given rise to any changes impairing interchangeability as compared with the previous issues. The Type A thread with coarse pitch, which is not covered in the ISO Recommendations has been deleted.
It was necessary to forego absolute agreement with ISO provisions. This applies, for example, to the head dimensions of the screws which have been calculated from the inch measurements. It was deemed neither wise nor technically necessary to preserve agreement with the inch dimensions to an accuracy of 1/100 mm. The head dimensions and their permissible variations have been so specified that they lie within the limits laid down by the ISO Recommendations. This should safeguard the principle of interchangeability.
The problem of slot dimensions was more difficult. The majority of ISO member countries have indeed agreed to adopt inch dimensions for tapping screws, but this was declined by Germany. There was no inclination to abandon the existing basis used for slot widths, screwdrivers and slotting cutters for the slots of metric screws and to go over to exactly converted inch dimensions which would entail different slotting cutters and, possibly, also different screwdrivers. The Table below compares DIN and ISO slot widths.

Nominal diameter			2,2	2,9	3,5	3,9	4,2	4,8	5,5	6,3
Slot width	ISO	min.	0,58	0,79	0,99	0,99	1,14	1,27	1,42	1,63
		max.	0,79	0,99	1,22	1,22	1,37	1,52	1,70	1,90
	Nominal dimension		0,6	0,8	1	1	1,2	1,2	1,6	1,6
	DIN	min.	0,66	0,86	1,06	1,06	1,26	1,26	1,66	1,66
		max.	0,8	1	1,2	1,2	1,51	1,51	1,91	1,91
	Tolerance zone		C 13				C 14			

The Table shows that here, too, DIN - ISO interchangeability is more or less preserved.
The thread sizes are denoted internationally by numbers corresponding to the ANSI standard. These numbers are only of limited usefulness. Therefore, to denote the thread the nominal diameters (outside diameters) previously used have been retained and the ISO numbers quoted only for information purposes.
Furthermore, for the versions with cone end and with flat end the ISO Recommendations use the type letter symbols according to the ANSI standard. As with the denoting of the thread, adoption of these type letter symbols would have necessitated amendment of existing documents and would also have required new standard specification numbers. The old type letter symbols have therefore been retained. Hence the following situation has arisen:

Type B with cone end according to DIN = Type AB according to ISO

Type BZ with flat end according to DIN = Type B according to ISO

It is appropriate at this stage to draw attention to the possibility of confusion.
The ISO drafts still contain nominal diameters 1.5, 1.9, 2.6, 3.3 and 8 which are denoted by the numbers 0, 1, 3, 5 and 16. These sizes have not been adopted because they are not needed in Germany for tapping screws with slotted head.
Apart from the bringing into line with ISO practice, the new issues of DIN 7971, DIN 7972 and DIN 7973 have also experienced certain changes and additions which in recent years have shown themselves to be useful and necessary. These also include certain corrections made for editing reasons.
With regard to technical conditions of delivery and materials, reference has been made to DIN 267 Sheet 12 (at present circulating as draft). This draft, in turn, agrees with an ISO Recommendation in course of preparation.