UDC 621.884.75 : 620.1 August 1991

Break mandrel blind rivets

DIN 7337

Blindniete mit Sollbruchdorn

Supersedes July 1985 edition.

In keeping with current practice in standards published by the International Organization for Standardization (ISO), a comma has been used throughout as the decimal marker.

Dimensions in mm

1 Scope and field of application

This standard specifies dimensions of, and requirements regarding material, design, strength and finish, as well as the relevant methods of test for, blind rivets of the self-plugging type. Such rivets consist of a rivet body and an integral mandrel, which breaks off on setting ('break mandrel', for short). They are intended in particular for applications where the back side is not normally accessible after rivetting.

Use of blind rivets for automatic feed shall be the subject of agreement.

Continued on pages 2 to 11

2 Dimensions

Details left unspecified are to be selected as appropriate.

Type A, flat head

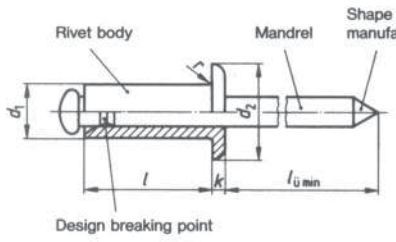

Type B, countersunk head

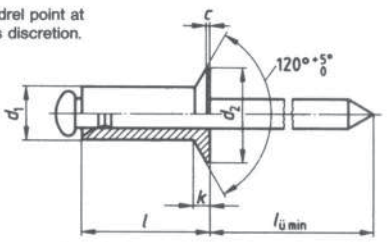

Length of projecting portion of mandrel, $l_{ü\,min}$ = 27

Table 1: Rivet dimensions

d_1[1])	Nominal size	Series 1	—	3	—	4	—	5	6	—
		Series 2	2,4	—	3,2	—	4,8	—	—	6,4
		Limit deviations	+0,08 −0,1			+0,08 −0,15				
d_2	Type A	Nominal size	5	6,5		8	9,5		12	13
		Limit deviations	0 −0,7			0 −1			0 −1,5	
	Type B	Nominal size	—	6		7,5	9		11	12
		Limit deviations	—	0 −0,4		0 −0,5			0 −0,7	
c		max.	—	0,3			0,4			
k	Type A	Nominal size	0,55	0,8		1	1,1		1,5	1,8
		Limit deviations	± 0,15	± 0,2		± 0,3			± 0,4	
	Type B	≈	—	0,9		1	1,2		1,5	1,6
r		max.	0,2			0,3			0,4	0,5

[1]) Series 1 = metric series.
Series 2 = inch-based series.

NOTE: For rivet bodies made from tubular material, the radius under the head may be larger than the r values specified in table 1 (cf. figure below).



Table 2: Nominal lengths

d_1[1]	Series 1	—	3	—	4	—	5	6	—
	Series 2	2,4	—	3,2	—	4,8	—	—	6,4

Nominal size	l Limit deviations	Grip length ranges
4		See subclause 8.2 for grip length ranges for blind rivets in commercial lengths. The grip length values given are minimum values. Given the variety of blind rivet types, no information on mass has been provided.
6		
8		
10		
12		
16	$^{+1}_{-0,2}$	
20		
25		
30		
35		
40		
45		
50		

[1]) Series 1 = metric series.
Series 2 = inch-based series.
Intermediate lengths shall be the subject of agreement.
Nominal lengths exceeding 50 mm shall be graded in 5 mm steps.

3 Materials

Rivet body and mandrel shall be made from the materials listed in table 3, customary combination being marked X.

Table 3: Rivet/mandrel materials

Break mandrel / Rivet body	Steel wire (St)	Stainless steel (A2)	Bronze wire (CuSn)
Wrought aluminium alloy (Al), AlMgSi0,5, AlMG2,5 or AlMg3 as in DIN 1725 Part 1, or AlMg3,5 as in ISO 209-1	X	X	
Steel (St), St 35 as in DIN 2391 Part 2, QSt 32-3 or QSt 36-3 as in DIN 1654 Part 2, or St 4 as in DIN 1624	X		
Stainless steel (A2) as in DIN 267 Part 11	X	X	
Wrought nickel alloy (NiCu), or NiCu30Fe as in DIN 17743	X	X	
Wrought copper alloy (CuNi), or CuNi30Mn1Fe as in DIN 17664	X	X	
Copper (Cu), or E-Cu57 as in DIN 1787	X	X	X
Use of other materials shall be the subject of agreement.			

4 Design and strength

Blind rivets shall be supplied with captive mandrel. The rivet body may have die marks originating from the manufacturing process provided that the upper limit of size specified for d_1 is not exceeded.

The break mandrel shall be designed so that the joint can be rivetted properly.

The axis of the throughhole in the rivet body, that of the mandrel head and that of the outside of the rivet body shall conincide so as to ensure proper formation of the blind head.

When the shear strength is tested in accordance with appendix A (cf. subclause 7.3.1), the shear force shall not be less than specified in table 6 and when the tensile strength is tested in accordance with appendix B (cf. subclause 7.3.2), the tensile force shall not be less than specified in table 7.

5 Surface finish

The surface of rivet bodies made of aluminium, copper or steel grade A2 shall be bright (i.e. do not require a finish).

Rivet bodies made of steel, CuNi or NiCu alloy shall be galvanized, to a coating thickness of at least 3 µm (A1P as in DIN 267 Part 9).

Other types of surface finish shall be subject to agreement.

Mandrels made of steel shall be galvanized, to a coating thickness of at least 3 µm (A1P as in DIN 267 Part 9), or phosphated as described in DIN 50942.

The surface finish of mandrels made of other materials shall be subject to agreement, a bright finish being given preference.

6 Designation

Designation of a type A blind rivet with a diameter, d_1, of 4 mm, a nominal length, l, of 8 mm, with a body made of steel (St), galvanized to at least 3 µm, and a mandrel of steel (St), galvanized (A1P):

Rivet DIN 7337 – A4 × 8 – St – St – A1

Designation of a type A blind rivet with a diameter, d_1, of 4 mm, a nominal length, l, of 8 mm, with a body made of aluminium (Al), bright finish, and a mandrel of steel (St), galvanized (A1P):

Rivet DIN 7337 – A4 × 8 – Al – St – A1P

Where steel rivet bodies are to have a coating thickness other than specified (e. g. A2P), this shall be indicated in the designation, e. g.:

Rivet DIN 7337 – A4 × 8 – St – A2P – St – A1P

Where aluminium rivet bodies are to be made of a particular grade of material (e. g. AlMg3; see table 3), the grade shall be included in the designation (replacing 'Al'), as shown in the following:

Blind rivet DIN 7337 – A4 × 8 – AlMg3 – St – A1P

7 Testing

7.1 Design and dimensions

The specifications of DIN 267 Part 5 shall apply as appropriate when testing for accuracy to size and checking the design. See table 4 for AQL values.

Table 4.

Characteristic	AQL value
Major characteristic: Diameter, d_1	1
Minor characteristic: Head diameter, d_2 Nominal length, l Head height, k (type A) Countersink angle (type B)	1,5
AQL 1 shall apply for batches containing duds (unfinished rivets) or foreign components (e. g. rivets of size shape other than specified).	

7.2 Materials, finish and strength

The number of specimens for testing the shear strength, tensile strength, material and surface finish shall be as specified in table 5. Rivets of the same design and material but of different length may be deemed equivalent.

Table 5: Number of specimens

Size of batch, in units		Number of specimens
Over	Up to	
—	800	1
800	8 000	2
8 000	22 000	3
22 000	—	5
Acceptance number, $A_c = 0$.		

Should defective items be found in the course of testing, additional tests shall be carried out, followed by a decision between supplier and client concerning the acceptability of the lot.

7.3 Test procedure

7.3.1 Shear test

The shear strength shall be determined using a test assembly as shown in appendix A. Prior to testing, the remainder of the break mandrel shall be removed.

Table 6: Shear strength

Material of rivet body	Diameter d_1							
	2,4	3	3,2	4	4,8	5	6	6,4
	Minimum shear force, in N							
Al	300	500	600	800	1400	1600	2500	2800
St	—	800	1000	1500	2400	2600	3300	3600
A2	—	1600	1800	2500	3800	4200	—	—
NiCu	—	—	1400	2000	3300	—	—	—
CuNi	—	800	1000	1500	2300	—	—	—
Cu	—	600	700	1000	—	—	—	—

7.3.2 Tensile test

The tensile strength shall be determined using a test assembly as shown in appendix B.

Table 7: Tensile strength

Material of rivet body	Diameter d_1							
	2,4	3	3,2	4	4,8	5	6	6,4
	Minimum tensile force, in N							
Al	300	400	500	800	1200	1300	2000	2100
St	—	900	1100	2000	3000	3200	3800	4000
A2	—	2000	2300	3500	4500	5000	—	—
NiCu	—	—	2000	2800	3500	—	—	—
CuNi	—	900	1100	2000	3000	—	—	—
Cu	—	700	800	1500	—	—	—	—

8 Joint hole diameter and grip length

8.1 Joint hole diameter

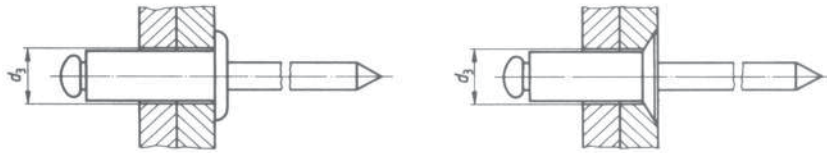

Table 8:

d_1		2,4	3	3,2	4	4,8	5	6	6,4
d_3	Nominal size	2,5	3,1	3,3	4,1	4,9	5,1	6,1	6,5
	Limit deviations	+0,05 0	+0,1 0					+0,2 0	

8.2 Grip lengths

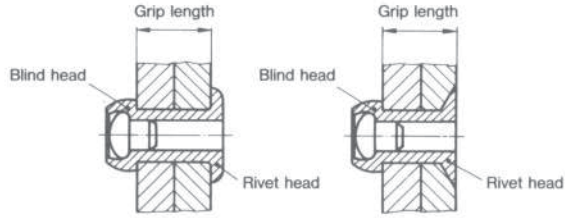

Table 9: Rivets with body made of Al alloy and mandrel made of St or A2

d_1	2,4*)	3	3,2	4	4,8	5	6*)	6,4*)
l	Grip length range							
4	0,5 to 2	0,5 to 1,5		—	—		—	—
6	2 to 4	1,5 to 3,5		1,5 to 3	2 to 3		—	—
8	4 to 6	3,5 to 5,5		3 to 5	3 to 4,5		2 to 4	—
10	-	5,5 to 7		5 to 6,5	4,5 to 6		4 to 6	—
12	—	7 to 9		6,5 to 8,5	6 to 8		6 to 8	2 to 6
16	—	9 to 13		8,5 to 12,5	8 to 12		8 to 11	6 to 10
20	—	13 to 17		12,5 to 16,5	12 to 16		11 to 15	10 to 14
25	—	17 to 22		16,5 to 21,5	16 to 21		15 to 20	14 to 18
30	—	—		—	21 to 25		20 to 24	18 to 23
35	—	—		—	25 to 30		24 to 29	—
40	—	—		—	30 to 35		29 to 34	—
45	—	—		—	35 to 40		34 to 39	—
50	—	—		—	40 to 45		39 to 44	—

*) Size not available for type B.

Table 10: Rivet bodies made of St and mandrel made of St

d_1	2,4	3	3,2	4	4,8	5	6*)	6,4*)
l	Grip length range							
6	—	0,5 to 3		0,5 to 2,5	—		—	—
8	—	3 to 5		2,5 to 4,5	2 to 4		—	1 to 3
10	—	5 to 7		4,5 to 6,5	4 to 6		2,5 to 4,5	—
12	—	7 to 9		6,5 to 8,5	6 to 8		4,5 to 6,5	3 to 6
16	—	9 to 12,5		8,5 to 12	8 to 11		6,5 to 10,5	6 to 9
20	—	12,5 to 16,5		12 to 16	11 to 15		10,5 to 14,5	9 to 13
25	—	—		16 to 21	15 to 20		14,5 to 19,5	13 to 17
30	—	—		—	20 to 25		—	—
35	—	—		—	25 to 30		—	—

Table 11: Rivet bodies made of A2, CuNi or NiCu and mandrel of St or A2

d_1	2,4	3*)[1]	3,2*)	4*)	4,8*)	5*)[2]	6	6,4
l	Grip length range							
6	—	1 to 3		1 to 2,5	1 to 2		—	—
8	—	3 to 5		2,5 to 4,5	2 to 4		—	—
10	—	5 to 7		4,5 to 6,5	4 to 6		—	—
12	—	7 to 9		6,5 to 8,5	6 to 8		—	—
16	—	—		8,5 to 12	8 to 11		—	—
20	—	—		12 to 16	11 to 15		—	—
25	—	—		16 to 21	15 to 20		—	—

Table 12: Rivet bodies made of Cu and mandrel made of St, A2 or CuSn

d_1	2,4	3*)	3,2*)	4*)	4,8	5	6	6,4
l	Grip length range							
4	—	0,5 to 1,5		—	—		—	—
6	—	1,5 to 3		2,5 to 3,5	—		—	—
8	—	3 to 5		3,5 to 4,5	—		—	—
10	—	5 to 7		4,5 to 6,5	—		—	—
12	—	7 to 9		6,5 to 8,5	—		—	—

Where the thickness of the components to be jointed is at the upper or lower limit of the relevant grip length range specified in tables 9 to 12, it is recommended that the suitability of the particular rivet be checked and, where necessary, the next largest or smallest value of l be used.

When rivetting, it shall be ensured that the rivet material(s) and rivetting technique preclude undue deformation of the assembly. After rivetting, the mandrel head shall be captive and the mandrel point not protrude beyond the rivet head.

*) Not available for type B rivets.
[1]) Not available in NiCu.
[2]) Not available in NiCu or CuNi.

Appendix A

Test assembly for shear testing of blind rivets

The illustration shows a test assembly by way of example.

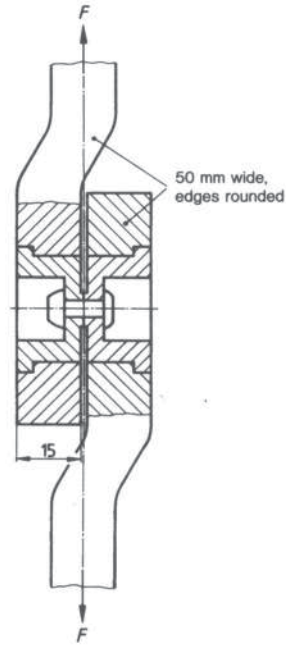

Figure A.1: Shear assembly

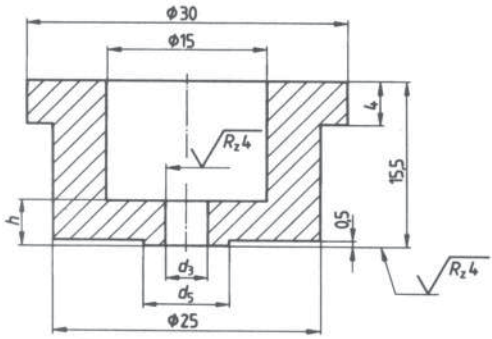

d_1 and d_3 as in table 8.
$d_5 = 2 \times d_1$
$h \leq d_1$

Bush for shear and tensile test (made of steel, quenched and tempered, to a hardness not less than 700 HV 30)

Figure A.2: Bush for type A rivets

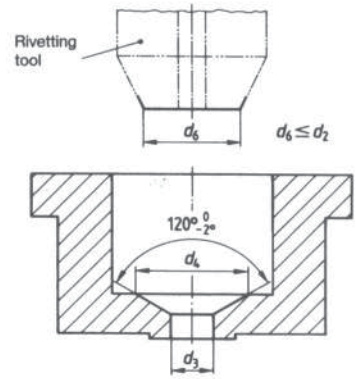

d_1	3	3,2	4	4,8	5	6	6,4
d_4	7		8,5	10,5		12,5	13,5

Other dimensions and details as for figure A.2

Figure A.3: Bush for type B rivets

Appendix B

Test assembly for tensile testing of blind rivets

The illustration shows a test assembly by way of example.

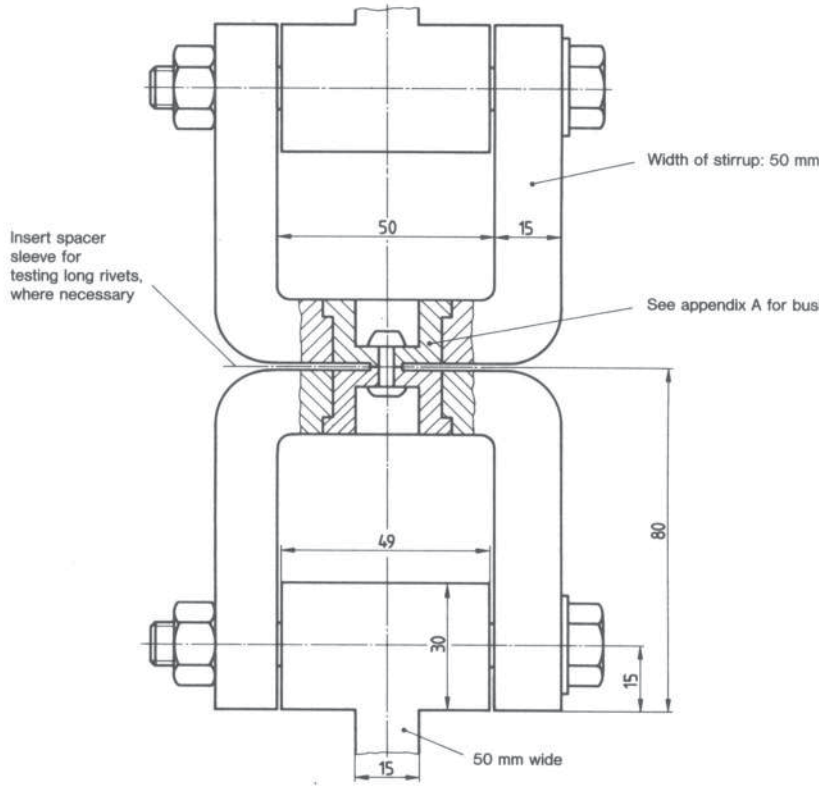

Figure B.1: Tensile test assembly

Standards referred to

DIN 267 Part 5	Fasteners; technical delivery conditions; acceptance inspection (modified version of ISO 3269 : 1984)
DIN 267 Part 9	Fasteners; technical delivery conditions; electroplated components
DIN 267 Part 11	Fasteners; technical delivery conditions; stainless and acid-resistant steel components (with addenda to ISO 3506)
DIN 1624	Steel flat products; cold reduced mild unalloyed steel strip in widths not exceeding 650 mm; technical delivery conditions
DIN 1654 Part 2	Cold heading and cold extruding steels; technical delivery conditions for killed unalloyed steel not intended for heat treatment
DIN 1725 Part 1	Wrought aluminium alloys
DIN 1787	Copper semi-finished products
DIN 2391 Part 2	Seamless precision steel tubes; technical delivery conditions
DIN 17664	Copper-nickel alloys; composition
DIN 17743	Wrought nickel-copper alloys; chemical composition
DIN 50942	Phosphating of metals; methods of test
ISO 209-1 : 1989	Wrought aluminium and aluminium alloys; chemical composition and forms of products; chemical composition

Previous editions

DIN 7337: 05.85, 07.85.

Amendments

The following amendments have been made to the July 1985 edition:

a) other materials have been specified;

b) the length of projection of the rivet mandrel, $l_{ü}$, has been specified;

c) for shear and tensile testing, an acceptance number, A_c, of zero has been specified.

International Patent Classification

F 16 B 5/04
F 16 B 19/05
G 01 B
G 01 N 3/00