UDC 621.882.31 : 621.882.55 July 1987

Prevailing torque type all-metal hexagon nuts

DIN 6925

Sechskantmuttern mit Klemmteil; Ganzmetallmuttern

Supersedes November 1983 edition.

In keeping with current practice in standards published by the International Organization for Standardization (ISO), a comma has been used throughout as the decimal marker.

See Explanatory notes for connection with International Standard ISO 7042 – 1983 published by the International Organization for Standardization (ISO).

Dimensions in mm

1 Field of application

This standard specifes requirements for M 3 to M 36 prevailing torque type all-metal hexagon nuts assigned to product grade A (for sizes up to M 16) and product grade B (for sizes over M 16).

If, in special cases, nuts are to comply with specifications other than those given in this standard, e.g. regarding materials other than those specified in DIN 267 Part 15 or corrosion resistance, this shall be agreed upon at the time of ordering (cf. 'Field of application' clause in DIN 267 Part 15).

2 Dimensions

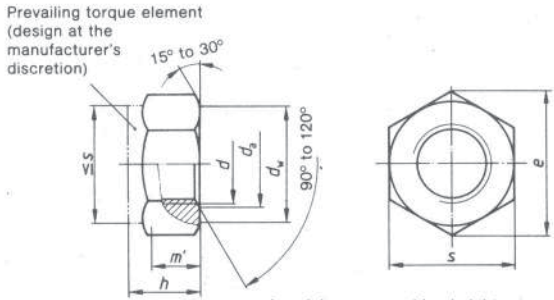

m' = minimum wrenching height.
For this zone, at least, e shall be maintained.

Continued on pages 2 to 4

Thread size (d)		M 3	M 4	M 5	M 6	(M 7)	M 8	M 10	M 12	(M 14)	M 16	M 20	M 24	M 30	M 36
		–	–	–	–	–	M 8 × 1	M 10 × 1	M 12 × 1,5	(M 14 × 1,5)	M 16 × 1,5	M 20 × 1,5	M 24 × 2	M 30 × 2	M 36 × 3
		–	–	–	–	–	–	(M 10 × 1,25)	(M 12 × 1,25)	–	–	–	–	–	–
P [1]		0,5	0,7	0,8	1	1	1,25	1,5	1,75	2	2	2,5	3	3,5	4
d_a	min.	3	4	5	6	7	8	10	12	14	16	20	24	30	36
	max.	3,45	4,6	5,75	6,75	7,75	8,75	10,8	13	15,1	17,3	21,6	25,9	32,4	38,9
d_w	min.	4,6	5,9	6,9	8,9	9,6	11,6	14,6	16,6	19,6	22,5	27,7	33,2	42,7	51,1
e	min.	6,01	7,66	8,79	11,05	12,12	14,38	17,77	20,03	23,35	26,75	32,95	39,55	50,85	60,79
h	max.	3,7	4,2	5,1	6	7	8	10	12	14	16	20	24	30	36
	min.	3,4	3,9	4,8	5,7	6,5	7,5	9	11	12	14	18	22	28	34
m'	min.	1,65	2,2	2,75	3,3	3,85	4,4	5,5	6,6	7,7	8,8	11	13,2	16,5	19,8
s	nominal size = max.	5,5	7	8	10	11	13	16	18	21	24	30	36	46	55
	min.	5,32	6,78	7,78	9,78	10,73	12,73	15,73	17,73	20,67	23,67	29,16	35	45	53,8

Use of thread sizes given in brackets should be avoided where possible.

[1]) P = pitch of coarse thread as specified in DIN 13 Part 12.

3 Technical delivery conditions

Material		Steel
General requirements		As specified in DIN 267 Parts 1 and 15.
Thread	Tolerance	6H[1])
	As specified in	DIN 13 Parts 12 and 15.
Mechanical properties (nut body)	Property class (material)	5, 6[2]), 8, 10 and 12 (for sizes up to M16).
	As specified in	ISO 898 Part 2 and DIN 267 Part 23.
Performance		As specified in DIN 267 Part 15.
Limit deviations and geometrical tolerances	Product grade	For sizes up to M16: A. For sizes over M16: B.
	As specified in	ISO 4759 Part 1.
Surface finish		As processed. DIN 267 Part 2 shall apply with regard to surface roughness. DIN 267 Part 20 shall apply with regard to permissible surface discontinuities. DIN 267 Part 9 shall apply with regard to electroplating.
Acceptance inspection		DIN 267 Part 5 shall apply with regard to acceptance inspection.

[1]) See DIN 267 Part 15 in this respect.

[2]) Only for fine pitch thread nuts.

Note. Tolerance class 6H shall apply for the thread of nuts with and without coating.

Where a protective coating is applied, e.g. an electroplated coating complying with DIN 267 Part 9, depending on the coating thickness required, it may be necessary to select a larger fundamental deviation than that assigned to the H position (see DIN 267 Part 9). This, however, might impair the resistance of the bolt/nut assembly to stripping.

4 Mass

The values of mass are given for guidance only.

Thread size (d)	M 5	M 6	M 8	M 10	M 12	M 14	M 16	M 20	M 24	M 30	M 36
Mass (7,85 kg/dm^3), for 1000 units, in kg ≈	1,2	2,4	5,1	9,4	14,5	22,3	31	66	111	225	379

Approximately the same values may be assumed for fine pitch thread nuts.

5 Designation

Designation of an M12 prevailing torque type hexagon nut assigned to property class 8:

Hexagon nut DIN 6925 – M12 – 8

If nuts of sizes over M16 are to comply with product grade A and the relevant tolerances as specified in ISO 4759 Part 1, this shall be indicated in the designation, e.g.:

Hexagon nut DIN 6925 – M20 – 8 – A

The DIN 4000-2-7 tabular layout of article characteristics shall apply for nuts covered in this standard.

6 Marking

The nuts shall be marked in accordance with the specifications given in DIN 267 Part 15.

Standards referred to

DIN 13 Part 12	ISO metric screw threads; coarse and fine pitch threads with diameters from 1 to 300 mm; selection of diameters and pitches
DIN 13 Part 15	ISO metric screw threads; fundamental deviations and tolerances for screw threads of 1 mm diameter and larger
DIN 267 Part 1	Fasteners; technical delivery conditions; general requirements
DIN 267 Part 2	Fasteners; technical delivery conditions; types of finish and dimensional accuracy
DIN 267 Part 5	Fasteners; technical delivery conditions; acceptance inspection (modified version of ISO 3269, 1984 edition)
DIN 267 Part 9	Fasteners; technical delivery conditions; electroplated components
DIN 267 Part 15	Fasteners; technical delivery conditions; prevailing torque type nuts
DIN 267 Part 20	Fasteners; technical delivery conditions; surface discontinuities on nuts
DIN 267 Part 23	Fasteners; technical delivery conditions; property classes for nuts with fine pitch thread (ISO classes)
DIN 4000 Part 2	Tabular layout of article characteristics for bolts, screws and nuts
ISO 898 Part 2	Mechanical properties of fasteners; nuts with specified proof load values
ISO 4759 Part 1	Tolerances for fasteners; bolts, screws and nuts with thread diameters $\geq 1{,}6$ and ≤ 150 mm and product grades A, B and C

Previous edition

DIN 6925: 11.83.

Amendments

In comparison with the November 1983 edition, the standard has been editorially revised and harmonized with ISO 7042.

Explanatory notes

The content of the present standard has been harmonized with, but is not identical to ISO 7042. For information purposes, the following table compares DIN and ISO nuts with reference to the nut height, this being the criterion of interchangeability.

Thread size (d)		M 5	M 6	M 8	M 10	M 12	M 14	M 16	M 20	M 24	M 30	M 36
h max.	DIN 6925	5,1	6	8	10	12	14	16	20	24	30	36
	ISO 7042	5,1	6	8	10	12,1	14,1	16,4	20,3	23,9	30	36
h min.	DIN 6925	4,8	5,7	7,5	9	11	12	14	18	22	28	34
	ISO 7042	4,8	5,4	7,14	8,94	11,57	13,4	15,7	19	22,6	27,3	33,1

The table shows that, in many cases, the maximum sizes are almost identical, interchangeability thus being ensured. The maximum and minimum sizes specified in DIN 7042, however, have not been adopted unamended, as they do not correspond to those generally used in Germany.

The international designation of nuts in accordance with ISO 7042 may read as follows:

Prevailing torque type hexagon nut ISO 7042 – M12 – 8 – NF

On the basis of ISO 2320, ISO 7042 differentiates between normal friction (NF) and low friction (LF) nuts. As low friction nuts are not widely used in Germany, the present standard does not adopt symbols LF and NF specified in the ISO Standard for the purpose of distinguishing between the two types, which otherwise have the same dimensions (see DIN 267 Part 15).

International Patent Classification

F 16 B 39/28