UDC 621.882.31 : 621.882.55 July 1987

# Prevailing torque type hexagon nuts
with nonmetallic insert

DIN 6924

Sechskantmuttern mit Klemmteil; nichtmetallischer Einsatz

Supersedes November 1983 edition.

*In keeping with current practice in standards published by the International Organization for Standardization (ISO), a comma has been used throughout as the decimal marker.*

Except for dimensions $h$ (min.) and $m'$, the dimensional specifications given in the present standard are identical to those given in ISO 7040 – 1983 published by the International Organization for Standardization (ISO).

Dimensions in mm

## 1 Field of application

This standard specifes requirements for M 3 to M 48 prevailing torque type hexagon nuts with nonmetallic insert, assigned to product grade A (for sizes up to M 16) and product grade B (for sizes over M 16).

If, in special cases, nuts are to comply with specifications other than those given in this standard, e.g. regarding materials other than those specified in DIN 267 Part 15, performance at temperatures above +120 °C, or corrosion resistance, this shall be agreed upon at the time of ordering (cf. 'Field of application' clause in DIN 267 Part 15).

Note. Up to and including size M 36, the nut dimensions correspond to those of style 1 hexagon nuts, plus the dimensions of the prevailing torque element.

## 2 Dimensions

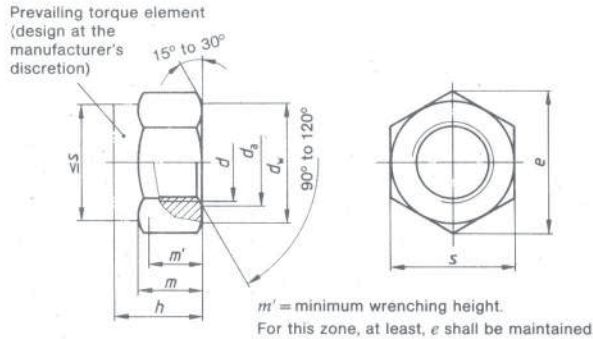


$m'$ = minimum wrenching height.
For this zone, at least, $e$ shall be maintained.

Continued on pages 2 to 4

| Thread size ($d$) | | M 3 | M 4 | M 5 | M 6 | (M 7) | M 8 | M 10 | M 12 | (M 14) | M 16 | (M 18) |
|---|---|---|---|---|---|---|---|---|---|---|---|---|
| | | – | – | – | – | – | M 8 × 1 | M 10 × 1 | M 12 × 1,5 | (M 14 × 1,5) | M 16 × 1,5 | (M 18 × 1,5) |
| | | – | – | – | – | – | – | (M 10 × 1,25) | (M 12 × 1,25) | – | – | – |
| $P$ [1] | | 0,5 | 0,7 | 0,8 | 1 | 1 | 1,25 | 1,5 | 1,75 | 2 | 2 | 2,5 |
| $d_a$ | min. | 3 | 4 | 5 | 6 | 7 | 8 | 10 | 12 | 14 | 16 | 18 |
| | max. | 3,45 | 4,6 | 5,75 | 6,75 | 7,75 | 8,75 | 10,8 | 13 | 15,1 | 17,3 | 19,5 |
| $d_w$ | min. | 4,6 | 5,9 | 6,9 | 8,9 | 9,6 | 11,6 | 14,6 | 16,6 | 19,6 | 22,5 | 24,9 |
| $e$ | min. | 6,01 | 7,66 | 8,79 | 11,05 | 12,12 | 14,38 | 17,77 | 20,03 | 23,35 | 26,75 | 29,56 |
| $h$ | max. | 4,5 | 6 | 6,8 | 8 | 9 | 9,5 | 11,9 | 14,9 | 17 | 19,1 | 20,6 |
| | min. | 4,2 | 5,7 | 6,44 | 7,64 | 8,64 | 9,14 | 11,47 | 14,47 | 16,3 | 18,26 | 19,76 |
| $m$ | min. [2] | 2,15 | 2,9 | 4,4 | 4,9 | 6,14 | 6,44 | 8,04 | 10,37 | 12,1 | 14,1 | 15,1 |
| $m'$ | min. | 1,72 | 2,32 | 3,52 | 3,92 | 4,91 | 5,15 | 6,43 | 8,3 | 9,68 | 11,28 | 12,08 |
| $s$ | nominal size = max. | 5,5 | 7 | 8 | 10 | 11 | 13 | 16 | 18 | 21 | 24 | 27 |
| | min. | 5,32 | 6,78 | 7,78 | 9,78 | 10,73 | 12,73 | 15,73 | 17,73 | 20,67 | 23,67 | 26,16 |

| Thread size ($d$) | | M 20 | (M 22) | M 24 | (M 27) | M 30 | (M 33) | M 36 | (M 39) | M 42 | (M 45) | M 48 |
|---|---|---|---|---|---|---|---|---|---|---|---|---|
| | | M 20 × 1,5 | (M 22 × 1,5) | M 24 × 2 | (M 27 × 2) | M 30 × 2 | (M 33 × 2) | M 36 × 3 | (M 39 × 3) | M 42 × 3 | (M 45 × 3) | M 48 × 3 |
| | | – | – | – | – | – | – | – | – | – | – | – |
| $P$ [1] | | 2,5 | 2,5 | 3 | 3 | 3,5 | 3,5 | 4 | 4 | 4,5 | 4,5 | 5 |
| $d_a$ | min. | 20 | 22 | 24 | 27 | 30 | 33 | 36 | 39 | 42 | 45 | 48 |
| | max. | 21,6 | 23,7 | 25,9 | 29,1 | 32,4 | 35,6 | 38,9 | 42,1 | 45,4 | 48,6 | 51,8 |
| $d_w$ | min. | 27,7 | 31,4 | 33,2 | 38 | 42,7 | 46,6 | 51,1 | 55,9 | 59,9 | 64,7 | 69,4 |
| $e$ | min. | 32,95 | 37,29 | 39,55 | 45,2 | 50,85 | 55,37 | 60,79 | 66,44 | 72,09 | 76,95 | 82,6 |
| $h$ | max. | 22,8 | 24,5 | 27,1 | 31 | 32,6 | 35,5 | 38,9 | 42 | 45 | 48 | 50 |
| | min. | 21,5 | 23,2 | 25,8 | 29,4 | 31 | 33,9 | 37,3 | 40,4 | 43,4 | 46,4 | 48,4 |
| $m$ | min. [2] | 16,9 | 18,1 | 20,2 | 22,5 | 24,3 | 27,4 | 29,4 | 31,8 | 34 | 36 | 38 |
| $m'$ | min. | 13,52 | 14,48 | 16,16 | 18 | 19,44 | 21,92 | 23,52 | 25,44 | 27,2 | 28,8 | 30,4 |
| $s$ | nominal size = max. | 30 | 34 | 36 | 41 | 46 | 50 | 55 | 60 | 65 | 70 | 75 |
| | min. | 29,16 | 33 | 35 | 40 | 45 | 49 | 53,8 | 58,8 | 63,1 | 68,1 | 73,1 |

Use of thread sizes given in brackets should be avoided where possible.

[1] $P$ = pitch of coarse thread as specified in DIN 13 Part 12.

[2] Equal to minimum thread length.

## 3 Technical delivery conditions

| Material | | Steel |
|---|---|---|
| General requirements | | As specified in DIN 267 Parts 1 and 15. |
| Thread | Tolerance | 6H[1]) |
| | As specified in | DIN 13 Parts 12 and 15. |
| Mechanical properties (nut body) | Property class (material) | For sizes up to M 39: 5, 6[2]), 8, 10 and 12 (for sizes up to M 16). For sizes over M 39, subject to agreement. |
| | As specified in | ISO 898 Part 2 and DIN 267 Part 23. |
| Material (insert) | | Nonmetallic, e.g. polyamide |
| Performance | | As specified in DIN 267 Part 15. |
| Limit deviations and geometrical tolerances | Product grade | For sizes up to M 16: A. For sizes over M 16: B. |
| | As specified in | ISO 4759 Part 1. |
| Surface finish | | As processed. DIN 267 Part 2 shall apply with regard to surface roughness. DIN 267 Part 20 shall apply with regard to permissible surface discontinuities. DIN 267 Part 9 shall apply with regard to electroplating. |
| Acceptance inspection | | DIN 267 Part 5 shall apply with regard to acceptance inspection. |

[1]) See DIN 267 Part 15 in this respect.
[2]) Only for fine pitch thread nuts.

Note. Tolerance class 6H shall apply for the thread of nuts with and without coating.

Where a protective coating is applied, e.g. an electroplated coating complying with DIN 267 Part 9, depending on the coating thickness required, it may be necessary to select a larger fundamental deviation than that assigned to the H position (see DIN 267 Part 9). This, however, might impair the resistance of the bolt/nut assembly to stripping.

## 4 Mass

The values of mass are given for guidance only.

| Thread size ($d$) | M 3 | M 4 | M 5 | M 6 | M 7 | M 8 | M 10 | M 12 | M 14 | M 16 | M 18 |
|---|---|---|---|---|---|---|---|---|---|---|---|
| Mass (7,85 kg/dm$^3$), for 1000 units, in kg ≈ | 0,4 | 1,1 | 1,4 | 3,1 | 3,2 | 6 | 11,7 | 16,6 | 21 | 37,8 | 51,6 |

| Thread size ($d$) | M 20 | M 22 | M 24 | M 27 | M 30 | M 33 | M 36 | M 39 | M 42 | M 45 | M 48 |
|---|---|---|---|---|---|---|---|---|---|---|---|
| Mass (7,85 kg/dm$^3$), for 1000 units, in kg ≈ | 68 | 86 | 127 | 182 | 273 | 296 | 380 | 505 | 630 | 814 | 995 |

Approximately the same values may be assumed for fine pitch thread nuts.

## 5 Designation

Designation of an M 12 prevailing torque type hexagon nut with nonmetallic insert, assigned to property class 8:

Hexagon nut DIN 6924 – M 12 – 8

If nuts of sizes over M 16 are to comply with product grade A and the relevant tolerances as specified in ISO 4759 Part 1, this shall be indicated in the designation, e.g.:

Hexagon nut DIN 6924 – M 20 – 8 – A

The DIN 4000 – 2 – 7 tabular layout of article characteristics shall apply for nuts covered in this standard.

## 6 Marking

The nuts shall be marked in accordance with the specifications given in DIN 267 Part 15.

## Standards referred to

| | |
|---|---|
| DIN 13 Part 12 | ISO metric screw threads; coarse and fine pitch threads with diameters from 1 to 300 mm; selection of diameters and pitches |
| DIN 13 Part 15 | ISO metric screw threads; fundamental deviations and tolerances for screw threads of 1 mm diameter and larger |
| DIN 267 Part 1 | Fasteners; technical delivery conditions; general requirements |
| DIN 267 Part 2 | Fasteners; technical delivery conditions; types of finish and dimensional accuracy |
| DIN 267 Part 5 | Fasteners; technical delivery conditions; acceptance inspection (modified version of ISO 3269, 1984 edition) |
| DIN 267 Part 9 | Fasteners; technical delivery conditions; electroplated components |
| DIN 267 Part 15 | Fasteners; technical delivery conditions; prevailing torque type nuts |
| DIN 267 Part 20 | Fasteners; technical delivery conditions; surface discontinuities on nuts |
| DIN 267 Part 23 | Fasteners; technical delivery conditions; property classes for nuts with fine pitch thread (ISO classes) |
| DIN 4000 Part 2 | Tabular layout of article characteristics for bolts, screws and nuts |
| ISO 898 Part 2 | Mechanical properties of fasteners; nuts with specified proof load values |
| ISO 4759 Part 1 | Tolerances for fasteners; bolts, screws and nuts with thread diameters $\geq$ 1,6 and $\leq$ 150 mm and product grades A, B and C |

## Previous edition

DIN 6924: 11.83.

## Amendments

The following amendments have been made to the November 1983 edition.

a) In agreement with ISO 7040, the nut height for sizes M 4 and M 14 has been changed from 5 mm to 6 mm and from 17,8 to 17 mm.

b) The standard has been editorially revised.

## Explanatory notes

The dimensions given in the present standard are identical with those given in ISO 7040, in addition to the dimensions specified in ISO 7040, except for the minimum size of $h$, which has been additionally included, and for sizes exceeding M 36 not covered in ISO 7040.

Attention is drawn to the fact that the hexagon nuts covered in this standard are designated 'style 1' nuts, to distinguish them from style 2 hexagon nuts covered in ISO 7041 where larger overall heights for property classes 9 and 12 nuts are specified.

The international designation of nuts in accordance with ISO 7040 may read as follows:

**Prevailing torque type hexagon nut ISO 7040 – M 12 – 8 – NF**

On the basis of ISO 2320, ISO 7040 differentiates between normal friction (NF) and low friction (LF) nuts. As low friction nuts are not widely used in Germany, the present standard does not adopt symbols LF and NF specified in the ISO Standard for the purpose of distinguishing between the two types, which otherwise have the same dimensions (see DIN 267 Part 15).

## International Patent Classification

F 16 B 39/28