UDC 621.882.215.091.6 October 1981

Flat countersunk nib bolts

DIN 604

Senkschrauben mit Nase

Supersedes 11.70 edition

As it is current practice in standards published by the International Organization for Standardization (ISO), the comma has been used throughout as a decimal marker.

Dimensions in mm

1 Field of application

This standard specifies flat countersunk nib bolts with metric threads M 6 to M 24 of product grade C.

2 Dimensions, designation

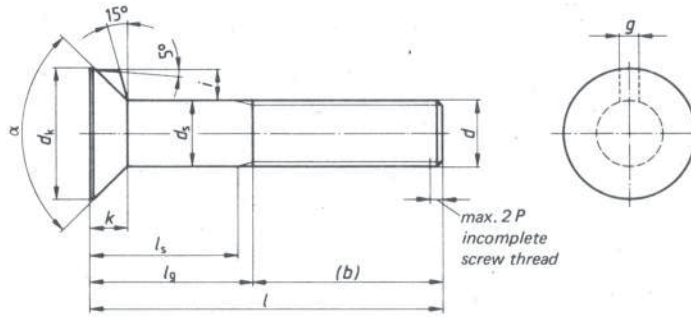

Designation of a flat countersunk nib bolt, with screw thread d = M 10, length l = 70 mm and strength category 3.6 or 4.6 (at manufacturer's discretion):

Flat countersunk bolt DIN 604 – M 10 x 70

Continued on pages 2 to 4

Screw thread d		M 6	M 8	M 10	M 12	M 16	M 20	M 24
P	1)	1	1,25	1,5	1,75	2	2,5	3
b	2)	18	22	26	30	38	46	54
	3)	24	28	32	36	44	52	60
	4)	–	41	45	49	57	65	73
d_k	max.	12,55	16,55	19,65	24,65	32,8	32,8	38,8
	min.	11,45	15,45	18,35	23,35	31,2	31,2	37,2
d_s 5)	max.	6	8	10	12	16	20	24
	min.	5,52	7,42	9,42	11,3	15,3	19,16	23,16
g	max.	2,5	3	3,2	3,6	4,2	5,4	6,6
	min.	2,1	2,6	2,72	3,12	3,72	4,92	6,02
i	min.	2,8	3,5	4,2	5,7	7,5	5,7	6,7
k		4	5	5,5	7	9	11,5	13
α	min.	90°					60°	
	max.	95°					65°	

Nominal size	l min.	l max.	Shank lengths l_s and l_g													
			l_s min.	l_g max.	l_s min.	l_g max.	l_s min.	l_g max.	l_s min.	l_g max.	l_s min.	l_g max.	l_s min.	l_g max.	l_s min.	l_g max.
20	18,95	21,05	–	9	–	11,5	–	13	–							
25	23,95	26,05	–	9	–	11,5	–	13	–	16						
30	28,95	31,05	–	9	–	11,5	–	13	–	16	–	19				
35	33,75	36,25	12	17	–	11,5	–	13	–	16	–	19				
40	38,75	41,25	17	22	11,75	18	–	13	–	16	–	19				
45	43,75	46,25	22	27	16,75	23	11,5	19	–	16	–	19				
50	48,75	51,25	27	32	21,75	28	16,5	24	11,25	20	–	19	–	24		
55	53,5	56,5	32	37	26,75	33	21,5	29	16,25	25	–	19	–	24		
60	58,5	61,5	37	42	31,75	38	26,5	34	21,25	30	–	19	–	24	–	28
65	63,5	66,5	42	47	36,75	43	31,5	39	26,25	35	17	27	–	24	–	28
70	68,5	71,5	47	52	41,75	48	36,5	44	31,25	40	22	32	–	24	–	28
80	78,5	81,5	57	62	51,75	58	46,5	54	41,25	50	32	42	21,5	34	–	28
90	88,25	91,75	67	72	61,75	68	56,5	64	51,25	60	42	52	31,5	44	21	36
100	98,25	101,75	77	82	71,75	78	66,5	74	61,25	70	52	62	41,5	54	31	46
110	108,25	111,75			81,75	88	76,5	84	71,25	80	62	72	51,5	64	41	56
120	118,25	121,75			91,75	98	86,5	94	81,25	90	72	82	61,5	74	51	66
130	128	132			95,75	102	90,5	98	85,25	94	76	86	65,5	78	55	70
140	138	142			105,75	112	100,5	108	95,25	104	86	96	75,5	88	65	80
150	148	152			115,75	122	110,5	118	105,25	114	96	106	85,5	98	75	90
160	156	164					120,5	128	115,25	124	106	116	95,5	108	85	100

Lengths exceeding 160 mm must be graded by steps of 20 mm.

The commercial lengths are indicated by their shank lengths.

Intermediate lengths should be avoided wherever possible.

1) P = thread pitch

2) For $l \leqq 125$ mm

3) For $125 < l \leqq 200$ mm

4) For $l > 200$ mm

5) For manufacturing reasons the + IT 15 tolerance is permissible for a length of 2 d below head. The shank diameter may also be ≈ pitch diameter at manufacturer's discretion.

If flat countersunk bolts according to this standard are to be supplied in strength categories 3.6 or 4.6 with hexagon nuts of strength category 5 or 4 according to DIN 555, the symbol Mu must be added to the designation, e.g.:

Flat countersunk bolt DIN 604 – M 10 x 70 – Mu

DIN 962 specifies additional forms, types and details of order, as far as the said standard is applicable to flat countersunk bolts.

3 Technical delivery conditions

Material		Steel
General requirements		according to DIN 267 Part 1
Screw thread	tolerance	8g
	standard	DIN 13 Part 13
Mechanical properties	strength category [1]	3.6 or 4.6 at manufacturer's discretion
	standard	DIN ISO 898 Part 1
Permissible dimensional deviations	product grade	C (previous type g)
	standard	DIN ISO 4759 Part 1
Surface		DIN 267 Part 2 applies to the peak-to-valley heights of surfaces permissible surface defects according to DIN 267 Part 19 galvanic surface protection according to DIN 267 Part 9 hot-dip galvanizing according to DIN 267 Part 10
Acceptance testing		according to DIN 267 Part 5

[1] If a specific strength category is required this must be indicated in the designation, e.g.:
Flat countersunk bolt DIN 604 – M 10 x 70 – 4.6

4 Weights

The weights listed are reference values.

Screw thread *d*	M 6	M 8	M 10	M 12	M 16	M 20	M 24
Length *l*	Weight (7,85 kg/dm³) kg/1000 pieces ≈						
20	4,90	9,50	14,9				
25	5,90	11,1	17,4	27,7			
30	7,00	12,7	19,9	31,4	61,8		
35	8,10	14,7	22,4	35,1	69,2		
40	9,20	16,7	25,5	38,8	76,2		
45	10,3	18,7	28,6	43,2	83,2		
50	11,4	20,7	31,7	47,6	90,2	128	
55	12,5	22,7	34,8	52,0	97,2	139	
60	13,6	24,7	37,9	56,4	105	150	225
65	14,7	26,7	41,0	60,8	113	161	241
70	15,8	28,7	44,1	65,2	121	173	257
80	17,9	32,7	50,3	73,8	137	197	291
90	20,1	36,7	56,5	84,1	153	221	327
100	22,3	40,7	62,7	93,1	169	245	363
110		44,7	68,9	102	185	269	399
120		48,7	75,1	111	201	293	435
130		52,7	81,3	120	217	318	471
140		56,7	87,5	129	233	340	507
150		60,7	94,0	138	249	364	543
160			100	147	265	388	579

Standards referred to

DIN 13 Part 13	ISO metric screw thread; review of screw threads for bolts and nuts from 1 to 52 mm thread diameter and limiting sizes
DIN 267 Part 1	Bolts, screws, nuts and similar threaded and formed parts; technical conditions of delivery; general information
DIN 267 Part 2	Bolts, screws, nuts and similar threaded and formed parts; technical conditions of delivery; types and dimensional accuracy
DIN 267 Part 5	Bolts, screws, nuts and similar threaded and formed parts; technical conditions of delivery; testing and accepting
DIN 267 Part 9	Mechanical fasteners; technical conditions of delivery; components with electroplated coatings
DIN 267 Part 10	Fasteners; technical conditions of delivery; hot-dip galvanized parts
DIN 267 Part 19	Fasteners; technical conditions of delivery; surface defects of screws
DIN 555	Hexagon nuts; metric thread, type g
DIN 962	Screws, bolts, studs and nuts; additional types and finishes; details of order and dimensions
DIN ISO 898 Part 1	Mechanical properties of fasteners; bolts, screws and studs
DIN ISO 4759 Part 1	Tolerances for fasteners; bolts, screws and nuts with thread diameters between 1,6 (inclusive) and 150 mm (inclusive) and product grades A, B and C

Former editions

DIN 565: 02.23, 04.25, 04.36; DIN 565 Supplement: 10.26; DIN 604 Part 1: 01.41, 05.53, 03.63; DIN 604 Supplement 1: 11.42; DIN 604: 07.25, 07.36, 12.67, 11.70

Amendments

Compared with the November 1970 edition the following amendments and additions have been made:

a) The "with hexagon nut according to DIN 555" type is no longer contained in the representation of the flat countersunk bolt. However, this type may still be ordered as part of this standard according to clause 2.

b) The dimensioning of the bolts was changed. The shank lengths l_s and l_g were adopted, l_g max. indicating at the same time the minimum grip of the bolts. The former screw thread length b is just a reference dimension for calculating l_s and l_g. The difference between l_s min. and l_g max. is 5 X thread pitch, this value including the screw thread runout and the tolerances on length. In the case of shorter bolts l_g max $= k + 5\,P$, with l_s falling in this range, i.e. these bolts have a thread almost reaching the head.

   This new kind of dimensioning does not adversely affect interchangeability (new for old), because the screw thread length b, taken as a basis for calculating l_s and l_g, was not changed.

c) The limits of the individual dimensions were adopted. They have regard to the tolerances according to DIN ISO 4759 Part 1, but this does not cause any significant changes as compared with the previous tolerances specified in DIN 267 Part 2.

d) The bolt weights were specified separately, the previous weights being reduced by the weights of the nuts.

e) The strength categories refer to DIN ISO 898 Part 1. This standard supersedes DIN 267 Part 3.

   The strength categories 3.6 and 4.6 apply as usual. It is not intended to differentiate between 3.6 and 4.6, because this limit depends on the manufacturing process.

f) Details concerning the type were adapted to DIN ISO 4759 Part 1. This standard partly supersedes DIN 267 Part 2.

   It was not possible to completely dispense with DIN 267 Part 2 in favour of DIN ISO 4759 Part 1, because, e.g., the DIN ISO Standard does not contain any details on the surfaces (peak-to-valley heights). Apart from this, product grades A, B and C of DIN ISO 4759 Part 1 are practically identical with the previous types m, mg and g according to DIN 267 Part 2. Therefore, in this case, type g could be replaced easily by product grade C.