UDC 621.882.215.091.4 October 1981

Mushroom head square neck bolts

DIN 603

Flachrundschrauben mit Vierkantansatz

Supersedes 11.70 edition

As it is current practice in standards published by the International Organization for Standardization (ISO), the comma has been used throughout as a decimal marker.

Dimensions in mm

1 Field of application

This standard specifies mushroom head square neck bolts with metric threads M 5 to M 20 of product grade C.

2 Dimensions, designation

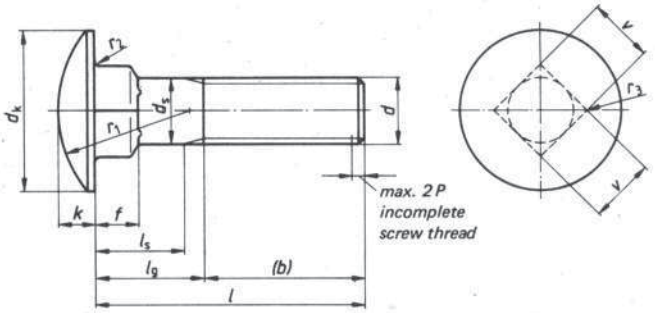

Designation of a mushroom head square neck bolt, with screw thread d = M 10, length l = 70 mm and strength category 3.6 or 4.6 (at manufacturer's discretion):

Mushroom head bolt DIN 603 – M 10 x 70

Continued on pages 2 to 5

Screw thread d		M 5	M 6	M 8	M 10	M 12	M 16	M 20
P	1)	0,8	1	1,25	1,5	1,75	2	2,5
b	2)	16	18	22	26	30	38	46
	3)	22	24	28	32	36	44	52
	4)	–	–	41	45	49	57	65
d_k	max.	13,55	16,55	20,65	24,65	30,65	38,8	46,8
	min.	12,45	15,45	19,35	23,35	29,35	37,2	45,2
d_s 5)	max.	5	6	8	10	12	16	20
	min.	4,52	5,52	7,42	9,42	11,3	15,3	19,16
f	max.	4,1	4,6	5,6	6,6	8,75	12,9	15,9
	min.	2,9	3,4	4,4	5,4	7,25	11,1	14,1
k	max.	3,3	3,88	4,88	5,38	6,95	8,95	11,05
	min.	2,7	3,12	4,12	4,62	6,05	8,05	9,95
r_1	≈	10,7	12,6	16	19,2	24,1	29,3	33,9
r_2	max.	0,5	0,5	0,5	0,5	1	1	1
r_3 6)	max.	0,75	0,9	1,2	1,5	1,8	2,4	3
v 5)	max.	5,48	6,48	8,58	10,58	12,7	16,7	20,84
	min.	4,52	5,52	7,42	9,42	11,3	15,3	19,16

l			Shank lengths l_s and l_g													
Nominal size	min.	max.	l_s min.	l_g max.	l_s min.	l_g max.	l_s min.	l_g max.	l_s min.	l_g max.	l_s min.	l_g max.	l_s min.	l_g max.	l_s min.	l_g max.
16	15,1	16,9	–	8	–	10										
20	18,95	21,05	–	8	–	10	–	12	–	14						
25	23,95	26,05	–	8	–	10	–	12	–	14						
30	28,95	31,05	–	18	–	10	–	12	–	14	–	18				
35	33,75	36,25	15	19	12	17	–	12	–	14	–	18				
40	38,75	41,25	20	24	17	22	11,75	18	–	14	–	18				
45	43,75	46,25	25	29	22	27	16,75	23	11,5	19	–	18				
50	48,75	51,25	30	34	27	32	21,75	28	16,5	24	–	18				
55	53,5	56,5	35	39	32	37	26,75	33	21,5	29	16,25	25	–	23		
60	58,5	61,5	40	44	37	42	31,75	38	26,5	34	21,25	30	–	23		
65	63,5	66,5	45	49	42	47	36,75	43	31,5	39	26,75	35	17	27		
70	68,5	71,5	50	54	47	52	41,75	48	36,5	44	31,25	40	22	32	–	28,5
80	78,5	81,5	60	64	57	62	51,75	58	46,5	54	41,25	50	32	42	21,5	34
90	88,25	91,75			67	72	61,75	68	56,5	64	51,25	60	42	52	31,5	44
100	98,25	101,75			77	82	71,75	78	66,5	74	61,25	70	52	62	41,5	54
110	108,25	111,75			87	92	81,75	88	76,5	84	71,25	80	62	72	51,5	64
120	118,25	121,75			97	102	91,75	98	86,5	94	81,25	90	72	82	61,5	74
130	128	132			101	106	95,75	102	90,5	98	85,25	94	76	86	65,5	78
140	138	142			111	116	105,75	112	108,5	108	95,25	104	86	96	75,5	88
150	148	152			121	126	115,75	122	110,5	118	105,25	114	96	106	85,5	98
160	156	164							120,5	128	115,25	124	106	116	95,5	108
180	176	184							140,5	148	135,25	144	126	136	115,5	128
200	195,4	204,6							160,5	168	155,25	164	146	156	135,5	148

Lengths exceeding 200 mm must be graded by steps of 20 mm.

The commercial lengths are indicated by their shank lengths.

Intermediate lengths should be avoided wherever possible.

1) to 6) see page 3

If mushroom head bolts according to this standard are to be supplied in strength category 3.6 or 4.6 with hexagon nuts of strength category 5 or 4 according to DIN 555, the symbol Mu must be added to the designation, e.g.:

Mushroom head bolt DIN 603 – M 10 x 70 – Mu

DIN 962 specifies additional forms, types and details of order, as far as the said standard is applicable to mushroom head bolts.

3 Technical delivery conditions

Material		Steel
General requirements		according to DIN 267 Part 1
Screw thread	tolerance	8g
	standard	DIN 13 Part 13
Mechanical properties	strength category [1]	3.6 or 4.6 at manufacturer's discretion 8.8 or other steel groups and strength categories only on agreement
	standard	DIN ISO 898 Part 1
Permissible dimensional deviations	product grade	C (previous type g)
	standard	DIN ISO 4759 Part 1
Surface		DIN 267 Part 2 applies to the peak-to-valley heights of surfaces permissible surface defects according to DIN 267 Part 19 galvanic surface protection according to DIN 267 Part 9 hot-dip galvanizing according to DIN 267 Part 10
Acceptance testing		according to DIN 267 Part 5

[1] If a specific strength category is required this must be indicated in the designation, e.g.:
Mushroom head bolt DIN 603 – M 10 x 70 – 4.6

[1] P = thread pitch
[2] For $l \leqq 125$ mm
[3] For $125 < l \leqq 200$ mm
[4] For $l > 200$ mm
[5] For manufacturing reasons the + IT 15 tolerance is permissible for a length of $2d$ below head (including square). Therefore, the corresponding limiting dimension is given for v max.
The shank diameter may also be $\approx$ pitch diameter at manufacturer's discretion.
[6] Radius r_3 must be adhered to for a minimum length of $0{,}5f$ below the head.

4 Weights

The weights listed are reference values.

Screw thread d	M 5	M 6	M 8	M 10	M 12	M 16	M 20
Length l	Weight (7,85 kg/dm³) kg/1000 pieces ≈						
16	4,00	6,90					
20	4,50	7,60	13,8	22,7			
25	5,10	8,50	15,4	25,2			
30	5,90	9,60	17,0	27,7	45,7		
35	6,70	10,7	19,0	30,2	49,4		
40	7,50	11,8	21,0	32,7	53,1		
45	8,30	12,9	23,0	35,8	56,8		
50	9,10	14,0	25,0	38,9	61,2	119	
55	9,90	15,1	26,9	42,0	65,6	126	
60	10,7	16,2	28,9	45,1	70,0	133	
65	11,5	17,3	30,9	48,2	74,4	141	
70	12,3	18,4	32,9	51,3	78,8	149	247
80	13,9	20,6	36,8	57,5	87,0	165	272
90		22,8	40,8	63,7	96,0	181	297
100		25,0	44,8	69,9	105	197	322
110		27,2	48,8	76,1	114	213	347
120		29,4	52,8	82,3	123	229	372
130		31,6	56,8	88,5	132	245	397
140		32,8	60,8	95,0	141	261	422
150		35,0	64,8	101	150	277	447
160				107	159	293	497
180				119	177	325	547
200				131	195	357	597

Standards referred to

DIN 13 Part 13	ISO metric screw thread; review of screw threads for bolts and nuts from 1 to 52 mm thread diameter and limiting sizes
DIN 267 Part 1	Bolts, screws, nuts and similar threaded and formed parts; technical conditions of delivery; general information
DIN 267 Part 2	Bolts, screws, nuts and similar threaded and formed parts; technical conditions of delivery; types and dimensional accuracy
DIN 267 Part 5	Bolts, screws, nuts and similar threaded and formed parts; technical conditions of delivery; testing and accepting
DIN 267 Part 9	Mechanical fasteners; technical conditions of delivery; components with electroplated coatings
DIN 267 Part 10	Fasteners; technical conditions of delivery; hot-dip galvanized parts
DIN 267 Part 19	Fasteners; technical conditions of delivery; surface defects of screws
DIN 555	Hexagon nuts; metric thread, type g
DIN 962	Screws, bolts, studs and nuts; additional types and finishes; details of order and dimensions
DIN ISO 898 Part 1	Mechanical properties of fasteners; bolts, screws and studs
DIN ISO 4759 Part 1	Tolerances for fasteners; bolts, screws and nuts with thread diameters between 1,6 (inclusive) and 150 mm (inclusive) and product grades A, B and C

Former editions

DIN 559: 02.23, 04.25, 04.36; DIN 559 Supplement: 10.26; DIN 603: 07.25, 07.36, 12.67, 11.70; DIN 603 Part 1: 01.41, 05.53, 03.63

Amendments

Compared with the November 1970 edition the following amendments and additions have been made:

a) The "with hexagon nut according to DIN 555" type is no longer contained in the representation of the mushroom head bolt. However, this type may still be ordered as part of this standard according to clause 2.

b) The dimensioning of the bolts was changed. The shank lengths l_s and l_g were adopted, l_g max. indicating at the same time the minimum grip of the bolts. The former screw thread length b is just a reference dimension for calculating l_s and l_g. The difference between l_s min. and l_g max. is 5 X thread pitch, this value including the screw thread runout and the tolerances on length. In the case of shorter bolts l_g max. = f max. + 5 P, with l_s falling in this range, i.e. these bolts have a thread almost reaching the square. This new kind of dimensioning does not adversely affect interchangeability (new for old), because the screw thread length b, taken as a basis for calculating l_s and l_g, was not changed.

c) The limits of the individual dimensions were adopted. They have regard to the tolerances according to DIN ISO 4759 Part 1, but this does not cause any significant changes as compared with the previous tolerances specified in DIN 267 Part 2.

d) New limiting dimensions resulting from DIN 267 Part 2 were specified for the square taking into account the permissible upsetting which corresponds to + IT 15 within a length of 2 d below head. The present stipulations in DIN 267 Part 2 are not quite clear in this respect.

e) The bolt weights were specified separately, the previous weights being reduced by the weights of the nuts.

f) The strength categories refer to DIN ISO 898 Part 1. This standard supersedes DIN 267 Part 3.

The strength categories 3.6 and 4.6 apply as usual. It is not intended to differentiate between 3.6 and 4.6, because this limit depends on the manufacturing process. Strength category 8.8 is permissible on agreement.

g) Details concerning the type were adapted to DIN ISO 4759 Part 1. This standard partly supersedes DIN 267 Part 2.

It was not possible to completely dispense with DIN 267 Part 2 in favour of DIN ISO 4759 Part 1, because, e.g., the DIN ISO Standard does not contain any details on the surfaces (peak-to-valley heights). Apart from this, product grades A, B and C of DIN ISO 4759 Part 1 are practically identical with the previous types m, mg and g according to DIN 267 Part 2. Therefore, in this case, type g could be replaced easily by product grade C.

h) The previous type "edges of square radiused" was replaced by adopting a maximum value for the rounding radius.